AA

APPLICATION NO. 06AA00568	PROJECT NO. 1000262
PROJECT NAME 10824 JICAMA WAY SE	
EPC APPLICATION NO.	
APPLICANT / AGENT BILL WEBER	PHONE NO. 344-0333
ZONE ATLAS PAGE L-21	
(SDP for SUB), (SDP for BP), (FINAL PLATS), (MASTER DEV PLAN), (IR), (AA)	

ONE STOP COMMENT FORM LOG

HYDROLOGY DEV (505) 924-3986

PLANS DISAPPROVED	DATE	DATE
PLANS APPROVED BLB	DATE 4/25/06	DATE

COMMENTS:

UTILITY DEV (505) 924-3989

PLANS DISAPPROVED	DATE	DATE
PLANS APPROVED NRA	DATE 4/25/06	DATE

COMMENTS:

TRANSPORTATION DEV (505) 924-3990

PLANS DISAPPROVED	DATE	DATE
PLANS APPROVED WG	DATE 4-20-06	DATE

COMMENTS:

PARKS AND REC (505) 768-5328

PLANS DISAPPROVED	DATE	DATE
PLANS APPROVED	DATE	DATE

COMMENTS:

Rec'd 4/25

PLANNING (505) 924-3858

PLANS DISAPPROVED	DATE	DATE
PLANS APPROVED RB	DATE 22 May '06	DATE

COMMENTS:

Rear yard patio cover
8' x 9'.
RB

Revised 3/3/04

(Return form with plat / site plan)

City of Albuquerque

DEVELOPMENT/ PLAN REVIEW APPLICATION

Supplemental form

SUBDIVISION — S
- ___ Major Subdivision action
- ___ Minor Subdivision action
- ___ Vacation — V
- ___ Variance (Non-Zoning)

SITE DEVELOPMENT PLAN — P
- ___ for Subdivision Purposes
- X for Building Permit A A
- ___ IP Master Development Plan
- ___ Cert. of Appropriateness (LUCC) — L

STORM DRAINAGE — D
- ___ Storm Drainage Cost Allocation Plan

ZONING & PLANNING — Z
- ___ Annexation
  - ___ County Submittal
  - ___ EPC Submittal
- ___ Zone Map Amendment (Establish or Change Zoning)
- ___ Sector Plan **(Phase I, II, III)**
- ___ Amendment to Sector, Area, Facility or Comprehensive Plan
- ___ Text Amendment (Zoning Code/Sub Regs)
- ___ Street Name Change (Local & Collector)

APPEAL / PROTEST of... — A
- ___ Decision by: DRB, EPC, LUCC, Planning Director or Staff, ZHE, Zoning Board of Appeals

PRINT OR TYPE IN BLACK INK ONLY. The applicant or agent must submit the completed application in person to the Planning Department Development Services Center, 600 2nd Street NW, Albuquerque, NM 87102. Fees must be paid at the time of application. Refer to supplemental forms for submittal requirements.

APPLICANT INFORMATION:

NAME: William & Rebecca Richardson PHONE: 505-332-8769
ADDRESS: 10824 Jicama Way SE FAX: ___
CITY: Albuquerque STATE NM ZIP 87123 E-MAIL: ___
Proprietary interest in site: Home Owner List all owners: William & Rebecca Richardson
AGENT (if any): Bill Weber Omega Sunspaces PHONE: 505-344-0333
ADDRESS: 3852 Hawkins NE FAX: 505-344-0641
CITY: Albuquerque STATE NM ZIP 87109 E-MAIL: omegasunspaces@aol.com

DESCRIPTION OF REQUEST: Installation of a patio cover in the rear yard setback area

Is the applicant seeking incentives pursuant to the Family Housing Development Program? ___ Yes. X No.

SITE INFORMATION: ACCURACY OF THE LEGAL DESCRIPTION IS CRUCIAL! ATTACH A SEPARATE SHEET IF NECESSARY.

Lot or Tract No. 80 Block: ___ Unit: ___
Subdiv. / Addn. Longford Village East
Current Zoning: SU-1 /PRD Proposed zoning: ___
Zone Atlas page(s): L-21 No. of **existing** lots: ___ No. of **proposed** lots: ___
Total area of site (acres): .13 Density if applicable: dwellings per gross acre: ___ dwellings per net acre: ___
Within city limits? X Yes. No___, but site is within 5 miles of the city limits.) Within 1000FT of a landfill? NO
UPC No. 102105617339220712 ___ MRGCD Map No. ___
LOCATION OF PROPERTY BY STREETS: On or Near: Jimch Way SE
Between: Southern Blvd SE and Elizabeth SE

CASE HISTORY:

List **any** current or prior case number that may be relevant to your application (Proj., App., DRB-, AX_,Z_, V_, S_, etc.): 1000262

Check-off if project was previously reviewed by Sketch Plat/Plan ?, or Pre-application Review Team ?. Date of review: ___

SIGNATURE Bill Weber DATE 4

(Print) Bill Weber ___ Applicant X Agent

FOR OFFICIAL USE ONLY Form revised 4/04

- ☑ **INTERNAL ROUTING**
- ☑ All checklists are complete
- ☑ All fees have been collected
- ☑ All case #s are assigned
- ☑ AGIS copy has been sent
- ☑ Case history #s are listed
- N/A ☐ Site is within 1000ft of a landfill
- N/A ☐ F.H.D.P. density bonus
- N/A ☐ F.H.D.P. fee rebate

Application case numbers	Action	S.F.	Fees
CLAIA - 005688	AA BP	P(4)	$ 45.00
			$
			$
			$
			$
			Total $ 45.00

Hearing date ___

4/19/04 **Project #** 1000262

FORM P(4): SITE PLAN REVIEW – ADMINISTRATIVE APPROVAL OR AMENDMENT

☐ **SITE DEVELOPMENT PLAN FOR BUILDING PERMIT IN THE DOWNTOWN SU-3 ZONE**

- __ Copy of the pre-application meeting findings (A pre-application meeting is required for Downtown 2010 projects.)
- __ Site plan and related drawings (folded to fit into an 8.5" x 14" pocket) **6** copies
- __ Zone Atlas map with the entire property(ies) precisely and clearly outlined and crosshatched (to be photocopied)
- __ Letter briefly describing and justifying the request
- __ Letter of authorization from the property owner if application is submitted by an agent
- __ Notifying letter and certified mail receipts to owners of adjacent properties if required by pre-application meeting
- __ Infrastructure List, if relevant to the site plan
- __ Completed Site Plan for Building Permit Checklist
- __ Solid Waste Management Department signature on Site Plan if relevant
- __ Blue-line copy of Site Plan with Fire Marshal's stamp
- __ Copy of the LUCC approval if the site is in an historic overlay zone
- __ Fee (see schedule)
- __ Any original and/or related file numbers are listed on the cover application

☐ **AMENDMENT TO SITE DEVELOPMENT PLAN FOR SUBDIVISION**
☒ **AMENDMENT TO SITE DEVELOPMENT PLAN FOR BUILDING PERMIT**
☐ **CONCEALED OR SITE DEVELOPMENT PLAN CONTROLLED WIRELESS TELECOM FACILITY**

NOTE: The requirements specified below apply to the previous 3 plan types, unless otherwise noted.

- X Proposed Site Plan, with changes circled and noted if amended (folded to fit into an 8.5" x 14" pocket) **5** copies
- → X Copy of approved Site Plan being amended if applicable (folded to fit into an 8.5" x 14" pocket) **1** copy
- ✓ Zone Atlas map with the entire property(ies) precisely and clearly outlined and crosshatched (to be photocopied)
- X Letter briefly describing and justifying the request
- X Letter of authorization from the property owner if application is submitted by an agent
- X Copy of EPC or DRB Notice of Decision (not required for WTF)
- ✓ Fee (see schedule) 45.00
- __ Any original and/or related file numbers are listed on the cover application

NOTE: The next two items are also required <u>if the square footage change is 2% or more of any building's gross floor area</u>

- __ Notifying letter & certified mail receipts addressed to owners of adjacent properties
- __ Office of Neighborhood Coordination inquiry response, notifying letter, certified mail receipts

NOTE: Only for <u>wireless telecommunications facilities</u> that are <u>concealed</u> and/or <u>subject to site development plan review</u>, the following materials are required for application submittal in addition to **all** those listed above:

- __ Co-location evidence as described in *Zoning Code* §14-16-3-17(A)(5)
- __ Notarized statement declaring # of antennas accommodated. Refer to §14-16-3-17(A)(10)(d)2
- __ Letter of intent regarding shared use. Refer to §14-16-3-17(A)(10)(e)
- __ Letter of description as above also addressing concealment issues, if relevant. Refer to §14-16-3-17(A)(12)(a)
- __ Distance to nearest existing free standing tower, and its owner's name, if the proposed facility is also a tower
- __ Registered Engineer's stamp on the Site Development Plans
- __ Office of Community & Neighborhood Coordination inquiry response as above **based on ¼ mile radius**

PLEASE NOTE; If you are applying for approval of a telecom site to be located on City of Albuquerque property, there are several additional requirements. Contact Debbie Stover at 924-3940 for details.

I, the applicant, acknowledge that any information required but not submitted with this application will likely result in deferral of actions.

x Bill Weber
Applicant name (print)

x Bill Weber
Applicant signature / date

Form revised June 04, October 2004

☑ Checklists complete
☑ Fees collected
☑ Case #s assigned
☐ Related #s listed

Application case numbers
06AA-_____-00568
_____-_____-_____
_____-_____-_____

Vin Sis 4/19/04
Planner signature / date

Project # 1000262

PLAT MAP

Borrower: William and Rebecca Richardson
Property Address: 10824 Jicama Way SE
City: Albuquerque
Lender: Wells Fargo Bank

File No.: 05-165
Case No.: Summary Report
Zip: 87123

ADMINISTRATIVE AMENDMENT

File # 06AA-00563 Project # 1000262

Rear yard patio cover
8'x9'

APPROVED BY Russell Brito DATE 22 May '06

Rul #7

JUN 27

10824 JICAMA WAY S.E.
(50' R/W)

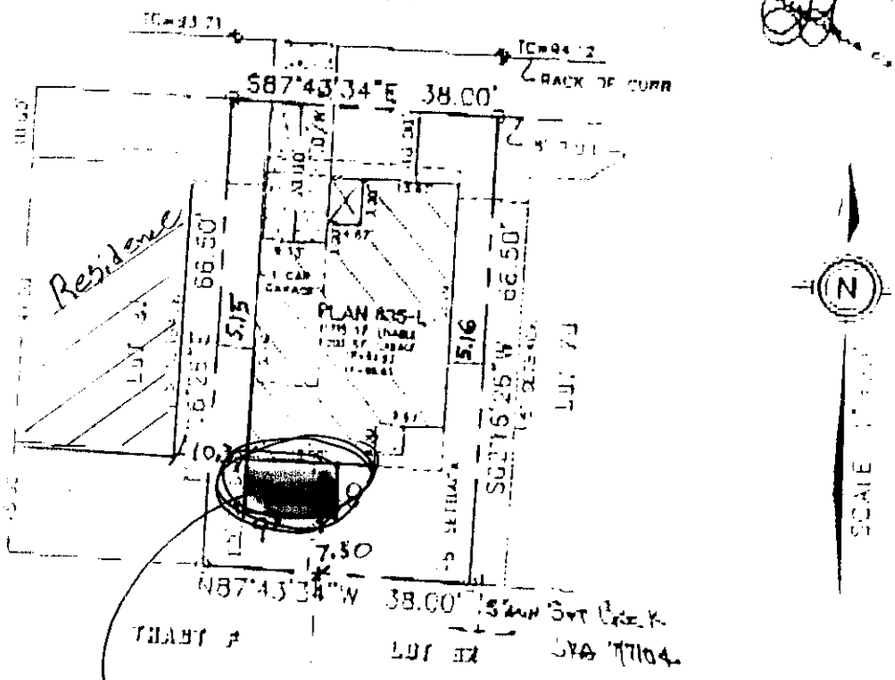

Proposed 9'x 8'
PATIO COVER

NOTE: LANDSCAPE PER APPROVED SITE DEVELOPMENT PLAN

OFFICIAL START NOTICE

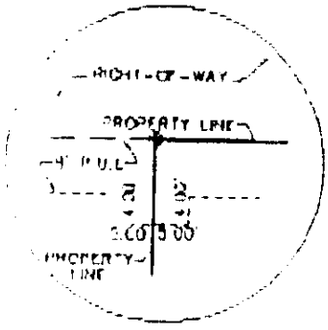

EASEMENT DETAIL
(TYPICAL)

PLOT PLAN

LOT 80
LONGFORD VILLAGE EAST
10824 JICAMA WAY S.E.

I HAVE REVIEWED AND UNDERSTAND THE RESPECTIVE PLOT PLAN. I ACCEPT THIS INFORMATION AND FURTHER INSTRUCT LONGFORD HOMES OF NEW MEXICO TO BUILD THIS HOME ACCORDING TO THIS PLAN, INCLUDING GARAGE PLACEMENT AND SET-BACKS TO PROPERTY LINES. ANY MINOR DEVIATIONS FROM THIS PLAN THAT MAY BE NECESSARY ARE ALSO ACCEPTED WITHOUT THE RIGHT TO REVIEW; HOWEVER, ANY MATERIAL DEVIATIONS FROM THIS PLAN FOR WHATEVER REASON, SHALL BE RESUB- MITTED FOR MY REVIEW AND APPROVAL.

NOTE

1. THERE SHALL BE A DISTANCE OF NOT LESS THAN TEN (10) FEET BETWEEN RESIDENTIAL BUILDINGS.
2. PROVIDE 9' WIDE DRIVEWAY WITH 15' CURB CUT

CUSTOMER _____ DATE _____

CUSTOMER _____ DATE _____

LONGFORD HOMES OF NEW MEXICO

ADMINISTRATIVE AMENDMENT

Title: _____ Project #: _____

_____

_____

_____

_____

APPROVED BY _____ DATE _____

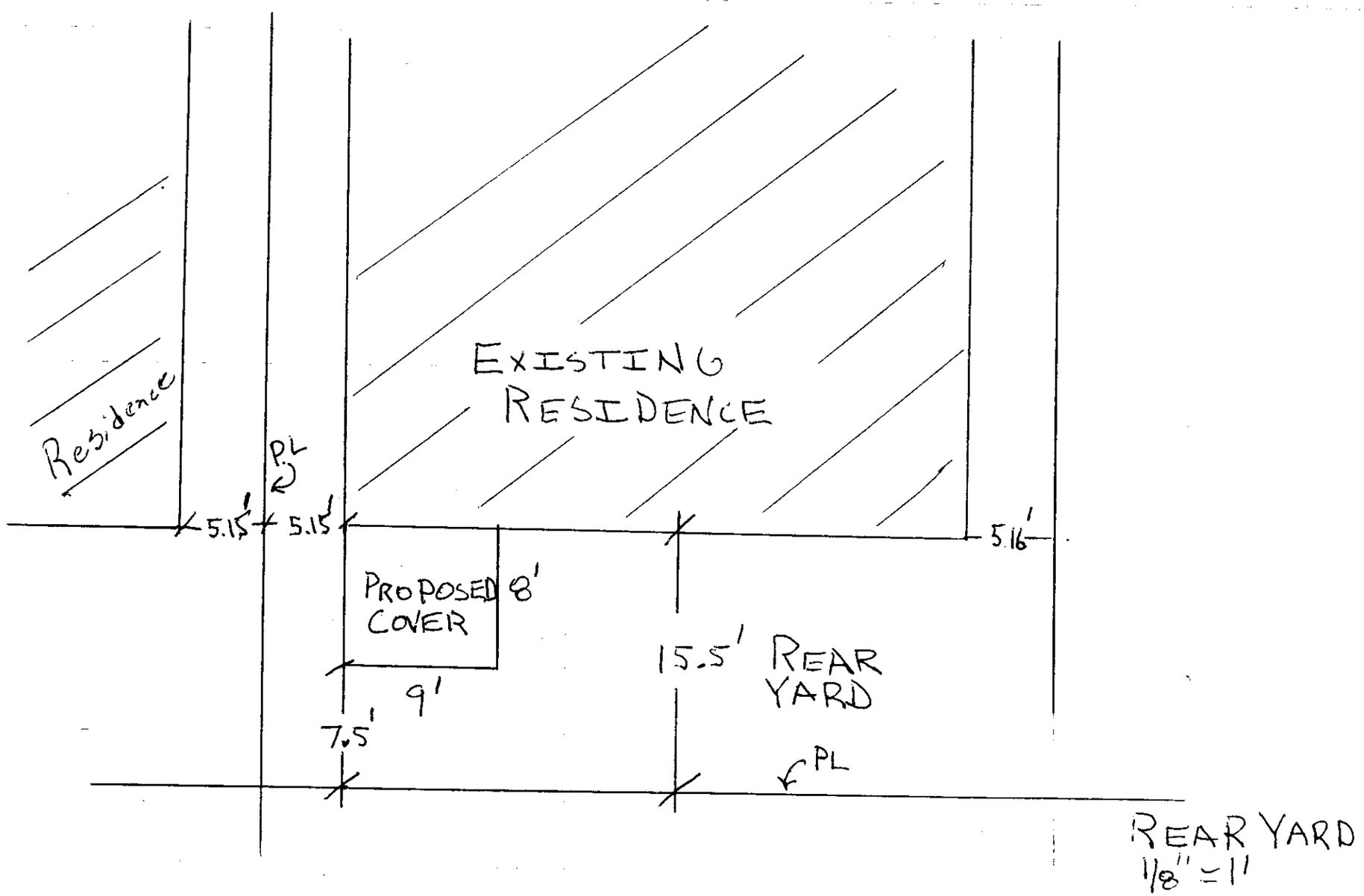
EXISTING
RESIDENCE
Residence
PL
5.15'
5.15'
5.16'
PROPOSED COVER
8'
9'
15.5' REAR YARD
7.5'
PL
REAR YARD
1/8" = 1'

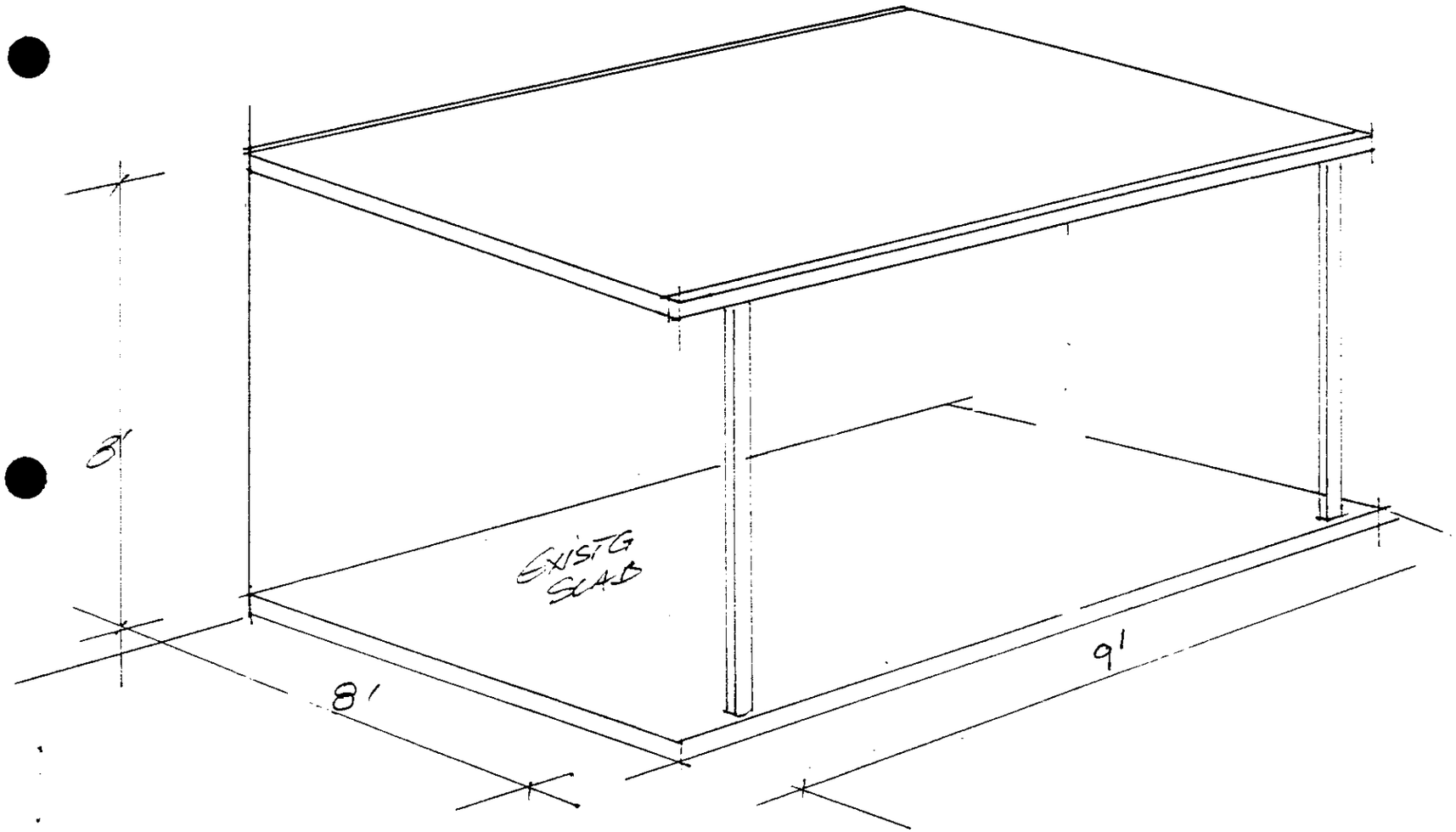
8'
EXISTG SLAB
8'
9'

April 11, 2006

To Whom It May Concern,

I am writing to inform you that we have given Omega Sunspaces and Bill Weber our approval to act as our agent for the purpose of submitting any paperwork/applications necessary for us to obtain an Administrative Amendment, allowing us to have a patio cover erected over a portion of our back patio.

If you have any questions, do not hesitate to contact us at home (332-8769) or on our cell phone (463-0829).

Thank you for your time and understanding concerning this matter.

Sincerely,

William Richardson

Rebecca Richardson

Rebecca Richardson
Homeowners of
10824 Jicama Way SE
Albuquerque, NM 87123

City of Albuquerque
Planning Department
600 2nd Street NW
Albuquerque, NM 87102

Administrative Amendment

Re: William and Rebecca Richardson
10824 Jicama Way SE
Albuquerque, NM 87123

Request for a Administrative Amendment

The owner would like to install a 9' x 8' patio cover within the rear yard set back of the lot. The current home is 15.5' from the rear property line. The new patio cover addition would extend an additional 8' leaving 7.5' to the rear property line.

A. The structure will not be injurious to the adjacent property, neighborhood, or community.
B. The structure would be neutral in color to blend with existing residence.
C. The structure will not be enclosed.

Your favorable consideration would be appreciated

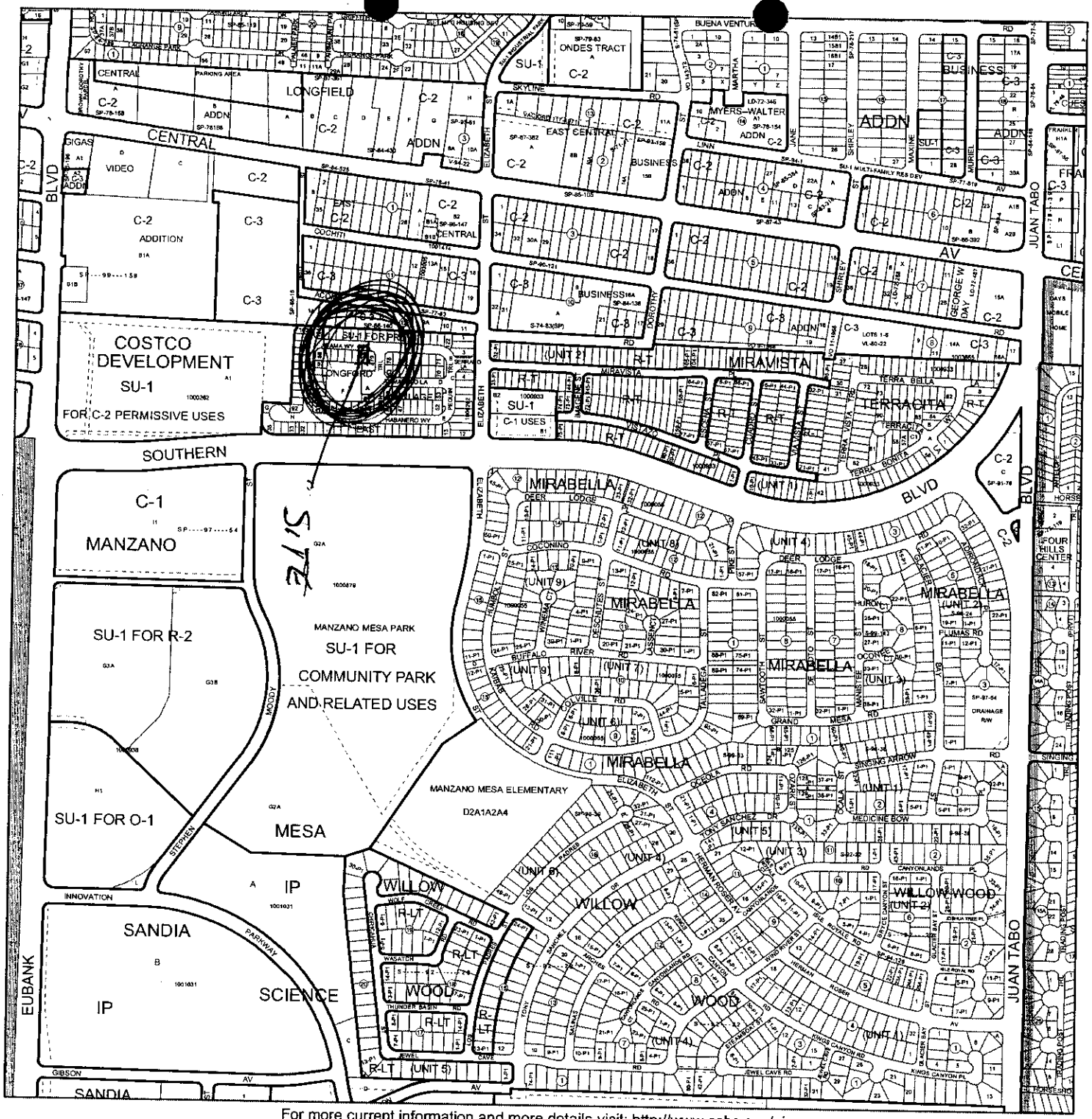

For more current information and more details visit: http://www.cabq.gov/gis

Albuquerque Geographic Information System

Map amended through: 11/2/2005

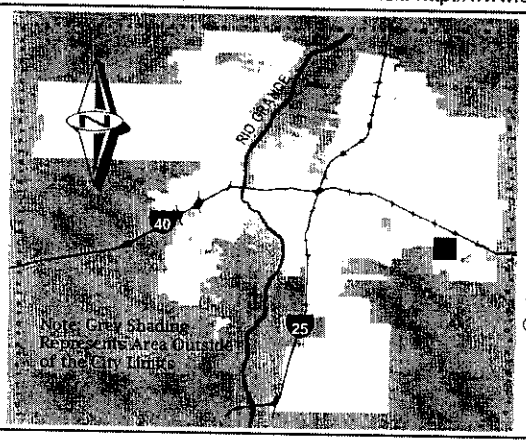

Zone Atlas Page:

L-21-Z

Selected Symbols

- SECTOR PLANS
- Design Overlay Zones
- City Historic Zones
- H-1 Buffer Zone
- Petroglyph Mon.
- Escarpment
- 2 Mile Airport Zone
- Airport Noise Contours
- Wall Overlay Zone

0 750 1,500 Feet

City of Albuquerque
Planning Department
Development Services Division
P.O. Box 1293
Albuquerque, New Mexico 87103

Date: December 19, 2003

OFFICIAL NOTIFICATION OF DECISION

FILE: **Project # 1000262**
03EPC-01476 EPC Site Development Plan-Subdivision
03EPC-01477 EPC Site Development Plan-Building Permit
03EPC-01478 Zone Map Amendment

Longford Homes
7301 Jefferson St. NE, Suite G-H
Albuq. NM 87109

LEGAL DESCRIPTION: for all or a portion of Tract B-1, **Costco Development, Manzano Mesa Addition,** a zone map amendment from SU-1 for C-2 Permissive Uses with IP Permissive Uses to SU-1 for PRD, located on SOUTHERN BLVD. SE, between EUBANK BLVD. SE and JUAN TABO SE, containing approx. 13 acres. (L-21) Simon Shima, Staff Planner

On December 18, 2003 the Environmental Planning Commission voted to approve Project 1000262/03EPC 01478, Zone Map Amendment from SU-1 for C-2 Permissive Uses and IP Permissive Uses to SU-1 for PRD, for Tract B-1, Costco Development, Manzano Mesa Addition, based on the following Findings:

FINDINGS:

1. This is a request for a zone map amendment from SU-1 for C-2 Permissive Uses and IP Permissive Uses to SU-1 for PRD for a 13 acre site located on Southern Boulevard SE between Eubank Boulevard SE and Elizabeth Street SE, hereinafter referred to as the "site".

2. The request is generally consistent with the applicable Comprehensive Plan Established Urban Area Policy a (to allow a full range of urban land uses), Policy d (the location, intensity and design of new development to respect existing neighborhood values), Policy e (new growth to be contiguous to existing urban services and facilities), and Policy k (land adjacent to arterial streets to minimize harmful effects of traffic).

3. A site development plan for subdivision, including design guidelines, has been submitted to comply with the requirement for SU-1 zoning.

4. In view of a limited access to the site via Elizabeth Street, prevailing mixed uses of land in the vicinity of the site, proposed smaller lots with common open space design, and effect on surrounding property, SU-1 zoning, as requested, is appropriate and is consistent with the express purpose of SU-1 zoning under the Zoning Code.

5. The proposal is to create 122 lots for 122 detached residences and common open space and common parking space on approximately 13 acres of land at a gross density of 9.3 dwelling units per acre. PRD zoning provides no density guideline or standard. Zoned R-T are the areas adjacent to and east of the site . R-T zoning allows development at a density similar to or higher than the requested gross density of 9.3 dwelling units per acre under SU-1 zoning for PRD. In terms of density, therefore, the requested zoning is compatible with prevailing zoning in the surrounding area.

6. The applicant has justified the requested zone map amendment based on changed neighborhood conditions pursuant to Resolution 270-1980.

On December 18, 2003 the Environmental Planning Commission voted to approve Project 1000262/03EPC 01476, Site Development Plan for Subdivision, for Tract B-1, Costco Development, Manzano Mesa Addition, based on the preceding Findings and subject to the following Conditions of Approval.

FINDINGS:

1. This is a request for approval of a site development plan for subdivision, hereinafter referred to as the "site plan for subdivision" for a 13 acre site located on Southern Boulevard SE between Eubank Boulevard SE and Elizabeth Street SE, hereinafter referred to as the "site".

2. The site plan for subdivision meets the informational requirements for such plan under the Zoning Code. The purpose of this request is to subdivide the land into122 residential lots, common open space and common parking space to develop a gated community with 122 detached residences. As shown in the site plan, typical lot size is 2,527 square-feet. Notwithstanding small lot size, the gross density of this project is comparable to that of the surrounding residential projects.

3. The current plat shows a an access easement from the Costco Whole property through the site to Elizabeth Street. However, this access easement will be terminated upon construction of sound wall between the Costco property and the site.

4. The common open space and common parking space accessible to all residential lots are laid out as a central focal point of the subdivision.

5. Vehicular access to the community is limited to the gated driveway from Elizabeth Street. Pedestrian and bicycle access is provided to the Costco property and Southern Boulevard as well as to Elizabeth Street.

6. Front and rear yard setbacks are standard for this type of development. Although 8 foot front yard setbacks are substantially less than the standard, private common open space and common parking space, and relatively wider private roads, as proposed, will compensate the front yard setback deficiency. The site plan would result in creating, physically speaking, a tight-knit residential community.

7. The site plan does not specifically indicate the location and height of lighting fixtures. It is recommended that the maximum height of light fixtures be limited to 16 feet as established in the Area Lighting Regulations of the Zoning Code.

8. The landscaping plan, as submitted, does not provide: a) existing and proposed easements; b) square-footage of landscaped area provided; and c) square-footage of planting beds, as required, respectively. Therefore, the landscaping plan is not complete.

9. The landscaping plan shows qualified street trees, i.e., Purple Robe Locust, Flowering Pear, or certain species of Ash, to be planted all along the public and private streets, and common open space to be fully landscaped. The landscaping plan shows a total of 26 street trees to be planted along Southern Boulevard. 10 additional street trees are required pursuant to the Street Tree Ordinance.

10. Architecture and signage are compatible with the built environment in the surrounding area.

11. No comments have been received from the neighborhood to date.

CONDITIONS:

1. The landscaping plan shall provide the following information: a) existing and proposed easements; b) square-footage of landscaped area provided; c) square-footage of planting beds; d) street names; and e) specific species of Ash to be planted, as required, respectively.

2. The site plan shall indicate pedestrian and bicycle access between Lot 37 and Lot 97, between Lot 36 and the existing drainage pond, and between Lot 29 and Lot 30.

3. The site plan shall indicate the location of monument signs and the gate at the driveway.

4. Conditions of approval for the proposed Zone Map Amendment, Site Development Plan for Subdivision and Site Development Plan for Building Permit shall include:
   a. All the requirements of previous actions taken by the EPC and the DRB must be completed and /or provided for.
   b. Approval of the site development plan for subdivision shall be contingent vacation of the existing access easement from the Costco Wholesale property through the proposed 13-acre development to Elizabeth street.

On December 18, 2003 the Environmental Planning Commission voted to approve Project 1000262/03EPC 01477, Site Development Plan for Building Permit, for Tract B-1, Costco Development, Manzano Mesa Addition, based on the following Findings and subject to the following Conditions:

FINDINGS:

1. This is a request for approval of a site development plan for building permit, hereinafter referred to as the "site plan for building permit" for a 13 acre site located on Southern Boulevard SE between Eubank Boulevard SE and Elizabeth Street SE, hereinafter referred to as the "site".

2. The site plan for building permit meets the informational requirements for such plan under the Zoning Code.

3. The site plan for building permit shows front yard setbacks to be minimum 8 feet for dwelling units and 20 feet for garages facing streets, rear yard setbacks to be minimum 15 feet, and side yard setbacks for dwelling units to be minimum 5 feet.

4. The maximum height of light fixtures is not shown. 16 feet are recommended as established in the Area Lighting Regulations of the Zoning Code.

5. The landscaping plan shows a total of 26 street trees to be planted along Southern Boulevard. 10 additional street trees are required pursuant to the Street Tree Ordinance.

6. No comments have been received from the neighborhood to date.

7. Tile roofs shall be slate or barrel tile, no asphalt shingles.

CONDITIONS:

1. Vehicular access to the community shall be limited to the gated driveway from Elizabeth Street. Pedestrian and bicycle access shall be provided to the Costco property between Lot 36 and the existing drainage pond, to Southern Boulevard between Lot 29 and Lot 30, and to Park/Open Space between Lot 37 and Lot 91.

2. Front yard setbacks shall be minimum 8 feet for dwelling units and 20 feet for garages facing streets. Rear yard setbacks shall be minimum 15 feet. Side yard setbacks for dwelling units shall be minimum 5 feet.

3. The maximum height of light fixtures shall be limited to 16 feet as established in the Area Lighting Regulations of the Zoning Code.

4. 10 additional street trees are required along Southern Boulevard pursuant to the Street Tree Ordinance.

5. Buffering shall be provided between the common parking space and Lot 61, and between the common parking space and Lot 62.

6. The Homeowners Association shall maintain all public space, including private roads, common landscaped open space and common parking space.

7. Conditions of approval for the proposed Zone Map Amendment, Site Development Plan fo Subdivision and Site Development Plan for Building Permit shall include:
   a. All the requirements of previous actions taken by the EPC and the DRB must be completed and /or provided for.
   b. The Developer is responsible for permanent improvements to the transportation facilities adjacen to the proposed site development plan for building permit. Those improvements shall include an additional right-of-way requirements, paving, curb and gutter, sidewalk and ADA accessibl ramps that have not already been provided for.
   c. Completion of the required TIS mitigation measures, per Transportation Development Staff, shal be completed if assumed to be in place for the current TIS for this site.
   d. The site shall comply and be designed per DPM Standards.
   e. Platting shall be a concurrent DRB action.

IF YOU WISH TO APPEAL/PROTEST THIS DECISION, YOU MUST DO SO BY **JANUARY 2, 2004** IN THE MANNER DESCRIBED BELOW. A NON-REFUNDABLE FILING FEE WILL BE CALCULATED AT THE LAND DEVELOPMENT COORDINATION COUNTER AND IS REQUIRED AT THE TIME THE APPEAL IS FILED.

Appeal to the City Council: Persons aggrieved with any determination of the Environmental Planning Commission acting under this ordinance and who have legal standing as defined in Section 14-16-4-4.B.2 of the City of Albuquerque Comprehensive Zoning Code may file an appeal to the City Council by submitting written application on the Planning Department form to the Planning Department within 15 days of the Planning Commission's decision. The date the determination in question is issued is not included in the 15-day period for filing an appeal, and if the fifteenth day falls on a Saturday, Sunday or holiday as listed in the Merit System Ordinance, the next working day is considered as the deadline for filing the appeal. The City Council may decline to hear the appeal if it finds that all City plans, policies and ordinances have been properly followed. If it decides that all City plans, policies and ordinances have not been properly followed, it shall hear the appeal. Such appeal, if heard, shall be heard within 45 days of its filing.

YOU WILL RECEIVE NOTIFICATION IF ANY OTHER PERSON FILES AN APPEAL. IF THERE IS NO APPEAL, YOU CAN RECEIVE BUILDING PERMITS AT ANY TIME AFTER THE APPEAL DEADLINE QUOTED ABOVE, PROVIDED ALL CONDITIONS IMPOSED AT THE TIME OF APPROVAL HAVE BEEN MET. SUCCESSFUL APPLICANTS ARE REMINDED THAT OTHER REGULATIONS OF THE CITY MUST BE COMPLIED WITH, EVEN AFTER APPROVAL OF THE REFERENCED APPLICATION(S).

Successful applicants should be aware of the termination provisions for Site Development Plans specified in Section 14-16-3-11 of the Comprehensive Zoning Code. Generally plan approval is terminated 7 years after approval by the EPC

Sincerely,

Russell Brito

for Victor J. Chavez
Planning Director

VJC/SS/ac

cc: Consensus Planning, 924 Park Ave. SW, Albuq. NM 87102
Kevin Dagget
Michael Silbert, 847 Adobe Rd.
Eric Gage, 7500 Jefferson NE, Albuq. NM

"Becci Richardson"
<4platypi@gmail.com>
05/22/2006 10:24 AM

To rbrito@cabq.gov
cc
bcc
Subject Administrative Amendment #1000262

Russel,

I have attached the two letters signed by my neighbors to the West and South confirming that they have no objections to our proposed patio cover. They were shown an overhead sketch of our back yard with an outline of the proposed structure as well as the photo of a similar cover from the contractor's web page.

I contacted the management company (Investement Solutions Property Mangement #343-0100) for the rental property to the East of our home on Saturday May 20th at approximately 11 am. They were unable to release any contact information to me without approval from the owner. Due to my position as HOA president, I am aware that the owner has a CA mailing address. I also contacted HOAMCO (the HOA management company) via e-mail to enquire whether they had a current phone number for the owner. No luck.

Please let me know if you need any further documentation.

Thanks! Sincerely,

Rebecca Richardson

10824 Jicama Way SE approval 1.jpg approval 2.jpg

May 2006

To Whom It May Concern:

I have reviewed my neighbor's plan to construct a patio cover over the western portion of their patio at 10824 Jicama Way SE. I have **no objections** to this project.

Sincerely,

Natasha L Green

Address:

319 Tepin Trail

May 2006

To Whom It May Concern:

I have reviewed my neighbor's plan to construct a patio cover over the western portion of their patio at 10824 Jicama Way SE. I have **no objections** to this project.

Sincerely,

Hally Reed

Address:

10820 Jicama Way SE

ONE STOP SHOP
CITY OF ALBUQUERQUE PLANNING DEPARTMENT
Development & Building Services

PAID RECEIPT

APPLICANT NAME WILLIAM & REBECCA RICHARDSON

AGENT BILL WEBER OMEGA SUNSPACES

ADDRESS 3852 HAWKINS NE

PROJECT & APP # 1000262 / 06AA-00568

PROJECT NAME 10824 JICAMA WAY SE

$ _____ 441032/3424000 Conflict Management Fee

$ _____ 441006/4983000 DRB Actions

$ 45.00 441006/4971000 EPC/AA/LUCC Actions & All Appeals

$ _____ 441018/4971000 Public Notification

$ _____ 441006/4983000 DRAINAGE PLAN REVIEW OR TRAFFIC IMPACT STUDY***
( )Major/Minor Subdivision ( )Site Development Plan ( )Bldg Permit
( ) Letter of Map Revision ( )Conditional Letter of Map Revision
( ) Traffic Impact Study

$ 45.00 TOTAL AMOUNT DUE

****NOTE: If a subsequent submittal is required, bring a copy of this paid receipt with you to avoid an additional charge.*

Counterreceipt.doc 6/21/04