SECTION 2200

STANDARD DETAILS FOR DRAINAGE

DWG. NO.	TITLE
2201	DRAINAGE STORM INLET TYPE “A” PLAN AND SECTION A-A
2201A	DRAINAGE STORM INLET TYPE “SGL A-DBL WING” PLAN AND SECTION A-A
2201B	DRAINAGE STORM INLET TYPE “DBL A-SGL WING” PLAN AND SECTION A-A
2201C	DRAINAGE STORM INLET TYPE “DBL A-DBL WING” PLAN AND SECTION A-A
2202	DRAINAGE STORM INLET TYPE “A” SECTIONS B-B, C-C, D-D, AND E-E
2205	DRAINAGE STORM INLET TYPE “C”
2206	DRAINAGE STORM INLET TYPE “D”
2207	DRAINAGE STORM INLET GUTTER TRANSITION
2208	DRAINAGE STORM SEWER MANHOLE TYPE “C”
2209	DRAINAGE STORM SEWER MANHOLE TYPE “E”
2210	DRAINAGE STORM SEWER MANHOLE FRAME AND COVER
2212	DRAINAGE STORM SEWER CONCRETE MANHOLE TOP SLAB TYPE “C”
2215	DRAINAGE STORM INLET CENTER SUPPORT ASSEMBLY
2216	DRAINAGE STORM INLET FRAME
2220	DRAINAGE STORM INLET ALBUQUERQUE GRATE
2222	DRAINAGE INLET SHAPING
2229	DRAINAGE STEP DETAILS
2235	DRAINAGE DRAIN LINE THROUGH CURB
2236	DRAINAGE SIDEWALK CULVERT
2237	DRAINAGE DRAIN LINE CONNECTION TO EXISTING STORM INLET
2240	HP PP STORM TRENCH INSTALLATION
2250	DRAINAGE STATIONARY AND REMOVABLE POST DETAILS
2251	DRAINAGE PIPE GATE DETAIL
2252	DRAINAGE STANDARD CHAIN LINK GATE AND FENCE DETAIL
2253	DRAINAGE SQUARE TUBE GATE DETAIL
2260	DRAINAGE TYPICAL LINING FOR DRAINAGE EASEMENTS
2261	DRAINAGE CHANNEL DETAILS
2265	DRAINAGE CHANNEL EXPANSION JOINT WITH SLEEPER
2266	DRAINAGE EXPANSION JOINT CONNECTION TO CONCRETE WALL
2267	DRAINAGE CHANNEL EXPANSION JOINT REPAIR
2268	DRAINAGE SLEEP JOINT PROTECTION PLATE
2270	DRAINAGE WIRE ENCLOSED RIPRAP
2271	DRAINAGE CATTLE GUARD INLET
2272	DRAINAGE CATTLE GUARD INLET
2273	DRAINAGE MEDIAN STORM INLET
2274	DRAINAGE STATIONING AND WATER DEPTH MARKS IN CONC. LINED CHANNEL SECTION

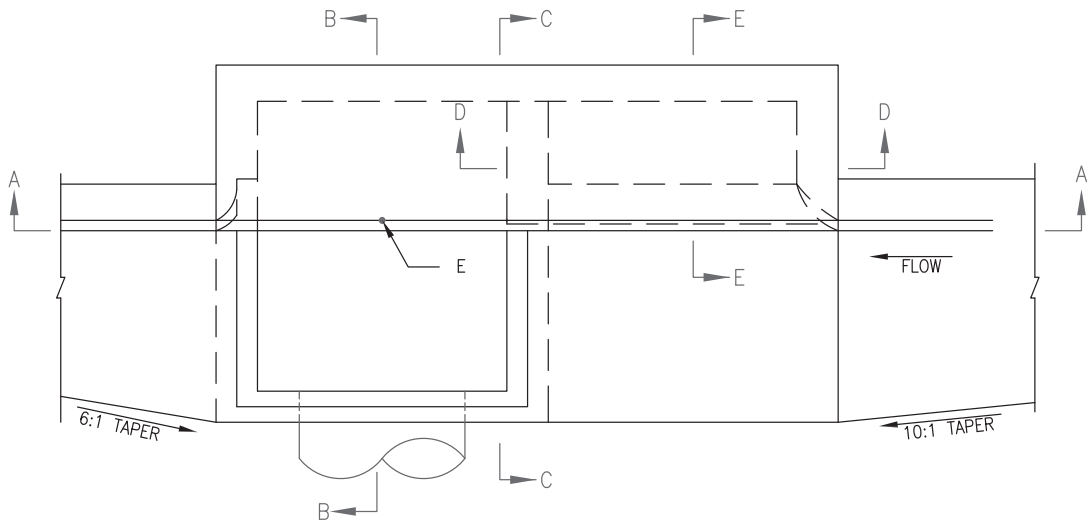

PLAN

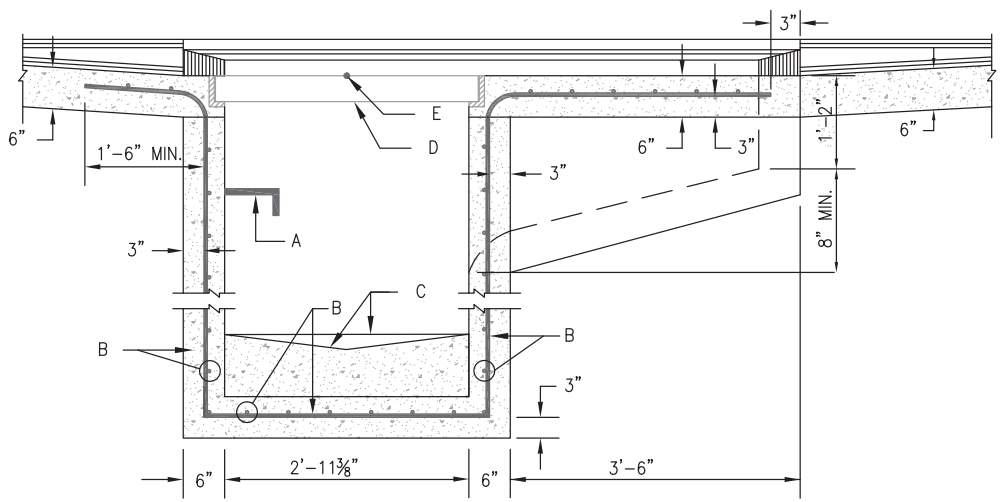

SECTION A-A

GENERAL NOTES

1. SEE DWG. 2202 FOR TYPE "A" INLET SECTIONS B-B, C-C, D-D, AND E-E.
2. FOR STORM INLET GUTTER TRANSITION, SEE DWG. 2207.
3. OUTLET PIPE SIZE, PER DESIGN REQUIREMENT. (MAXIMUM SIZE = 24")
4. MAXIMUM INLET DEPTH = 10'. FOR DEPTHS EXCEEDING 10', A SEPARATE STRUCTURAL DESIGN WILL BE REQUIRED.
5. FOR FRAME & GRATING, SEE DWG. 2216, 2220 OR 2221.
6. "DRAINS TO RIVER" ALUMINUM MEDALLION SHALL BE INSTALLED ON EACH NEW STORM INLET. THE MEDALLION IS TO BE INSTALLED PER MANUFACTURER INSTRUCTIONS IN THE CENTER OF THE INLET, WITH THE BOLT HOLE 6 INCHES FROM THE FRONT OF THE INLET.

CONSTRUCTION NOTES

A. FOR STORM INLET DEPTHS GREATER THAN 4', INSTALL STD. STEPS, SEE DWG. 2229. STEPS ARE TO BE INSTALLED ON DOWNSTREAM FACE OF INLET.

B. NO. 4 BARS AT 6" O.C. EACH WAY.

C. CONCRETE FILL, SHAPE PER DWG. 2222.

D. GRATE AND FRAME.

E. CONTROL POINT FOR TOP OF GRATE ELEVATION AND HORIZONTAL CONTROL.

REVISIONS	CITY OF ALBUQUERQUE
	DRAINAGE STORM INLET TYPE "A" PLAN AND SECTION A-A DWG. 2201 JUNE 2019

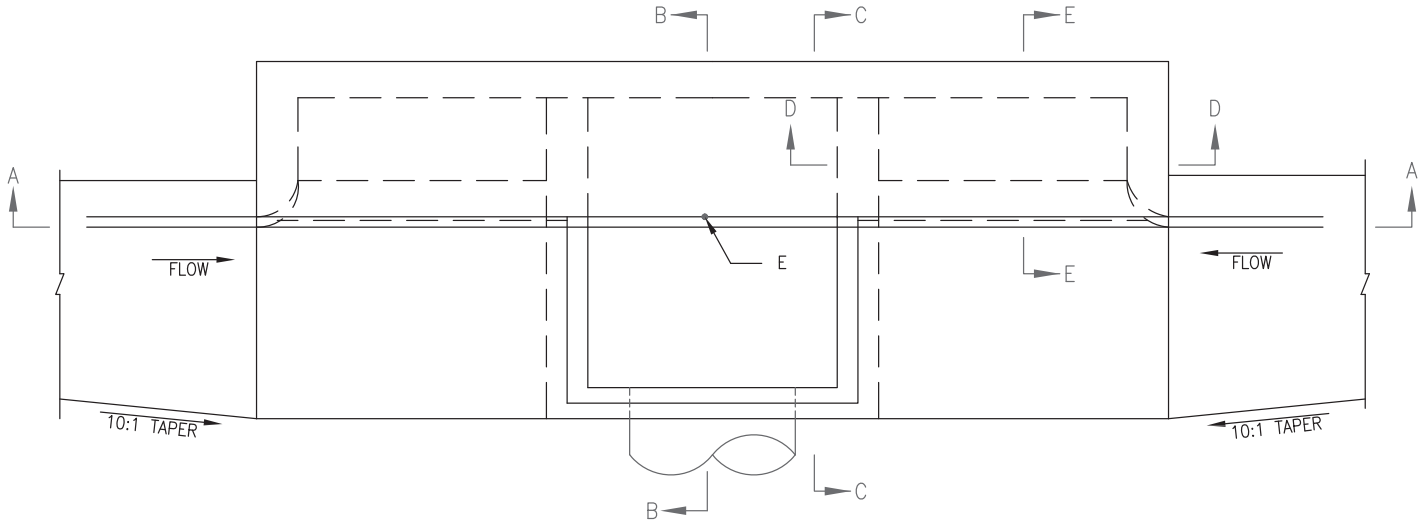

PLAN

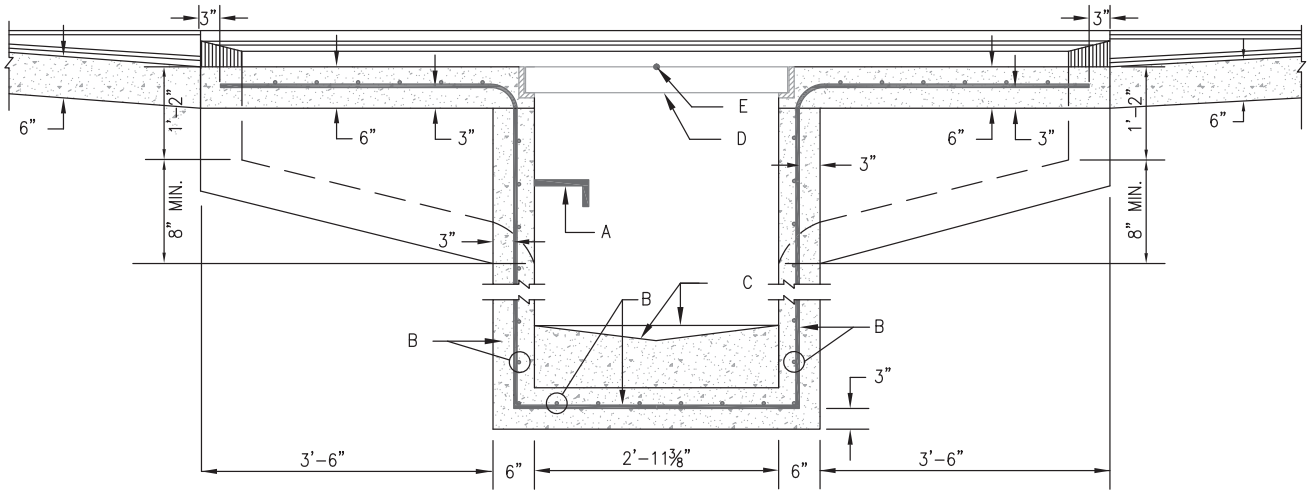

SECTION A–A

GENERAL NOTES

1. SEE DWG. 2202 FOR TYPE "A" INLET SECTIONS B–B, C–C, D–D, AND E–E.
2. FOR STORM INLET GUTTER TRANSITION, SEE DWG. 2207.
3. OUTLET PIPE SIZE, PER DESIGN REQUIREMENT. (MAXIMUM SIZE = 24")
4. MAXIMUM INLET DEPTH = 10'. FOR DEPTHS EXCEEDING 10', A SEPARATE STRUCTURAL DESIGN WILL BE REQUIRED.
5. FOR FRAME & GRATING, SEE DWG. 2216, 2220 OR 2221.
6. "DRAINS TO RIVER" ALUMINUM MEDALLION SHALL BE INSTALLED ON EACH NEW STORM INLET. THE MEDALLION IS TO BE INSTALLED PER MANUFACTURER INSTRUCTIONS IN THE CENTER OF THE INLET, WITH THE BOLT HOLE 6 INCHES FROM THE FRONT OF THE INLET.

CONSTRUCTION NOTES

A. FOR STORM INLET DEPTHS GREATER THAN 4', INSTALL STD. STEPS, SEE DWG. 2229.

B. NO. 4 BARS AT 6" O.C. EACH WAY.

C. CONCRETE FILL, SHAPE PER DWG 2222.

D. GRATE AND FRAME.

E. CONTROL POINT FOR TOP OF GRATE ELEVATION AND HORIZONTAL CONTROL.

REVISIONS	CITY OF ALBUQUERQUE
	DRAINAGE STORM INLET TYPE "SGL A–DBL WING" PLAN AND SECTION A–A DWG. 2201A JUNE 2019

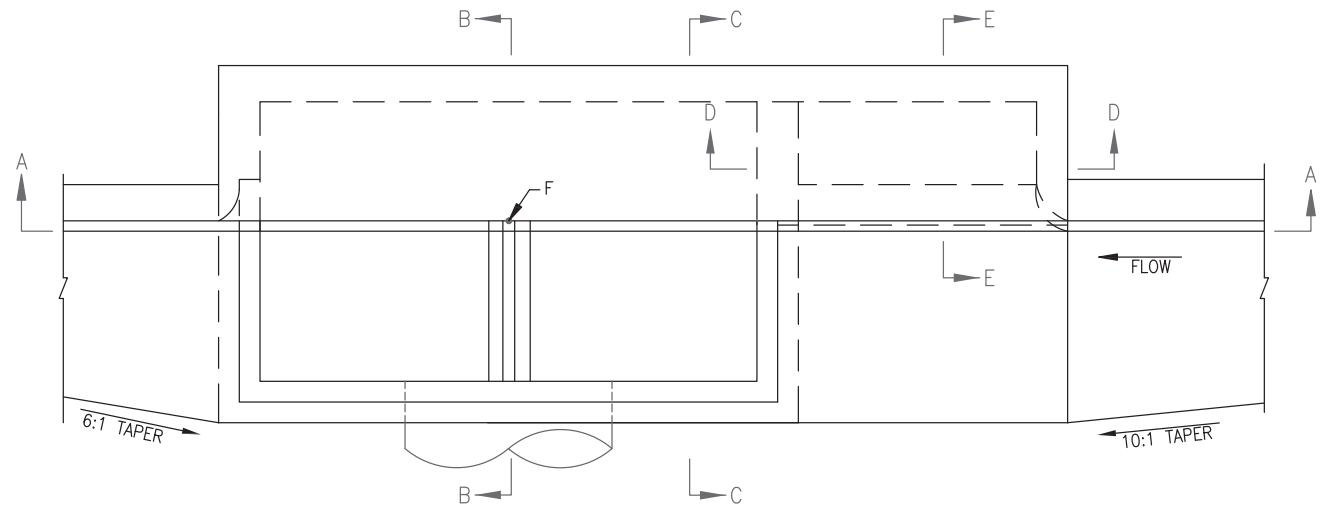

PLAN

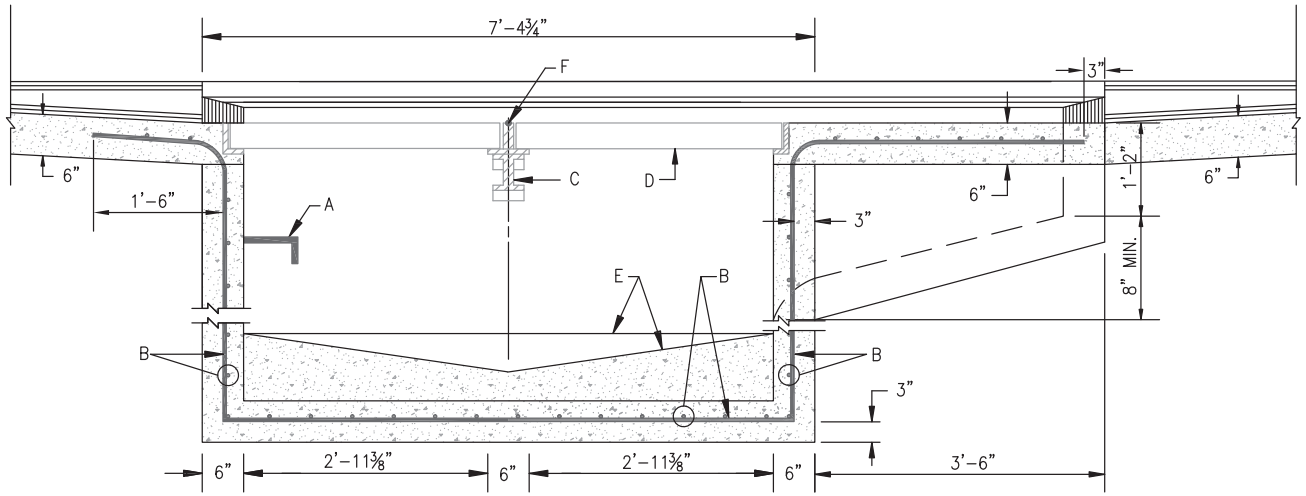

SECTION A-A

GENERAL NOTES

1. SEE DWG. 2202 FOR TYPE "A" INLET SECTIONS B-B, C-C, D-D, AND E-E.
2. FOR STORM INLET GUTTER TRANSITION, SEE DWG. 2207.
3. OUTLET PIPE SIZE, PER DESIGN REQUIREMENT. (MAXIMUM SIZE = 24")
4. MAXIMUM INLET DEPTH = 10'. FOR DEPTHS EXCEEDING 10', A SEPARATE STRUCTURAL DESIGN WILL BE REQUIRED.
5. FOR FRAME & GRATING, SEE DWG. 2216, 2220 OR 2221.
6. "DRAINS TO RIVER" ALUMINUM MEDALLION SHALL BE INSTALLED ON EACH NEW STORM INLET. THE MEDALLION IS TO BE INSTALLED PER MANUFACTURER INSTRUCTIONS IN THE CENTER OF THE INLET, WITH THE BOLT HOLE 6 INCHES FROM THE FRONT OF THE INLET.

CONSTRUCTION NOTES

A. FOR STORM INLET DEPTHS GREATER THAN 4', INSTALL STD. STEPS, SEE DWG. 2229. STEPS ARE TO BE INSTALLED ON DOWNSTREAM FACE OF INLET.

B. NO. 4 BARS AT 6" O.C. EACH WAY.

C. CENTER SUPPORT ASSEMBLY. SEE DWG. 2215.

D. GRATE AND FRAME.

E. CONCRETE FILL, SHAPE PER DWG. 2222.

F. CONTROL POINT FOR TOP OF GRATE ELEVATION AND HORIZONTAL CONTROL.

REVISIONS	CITY OF ALBUQUERQUE
	DRAINAGE STORM INLET TYPE "DBL A-SGL WING" PLAN AND SECTION A-A DWG. 2201B JUNE 2019

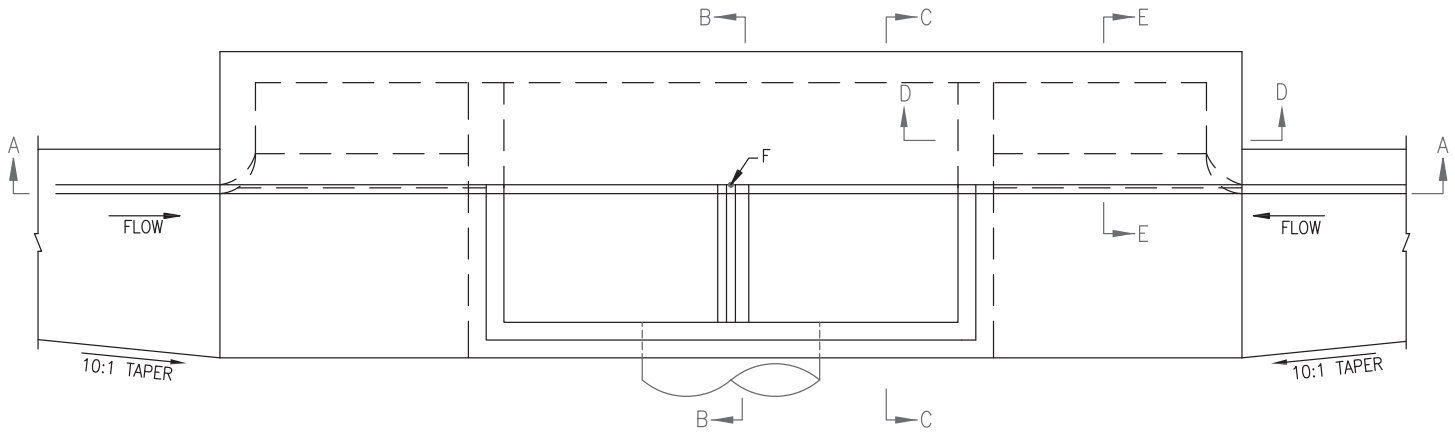

PLAN

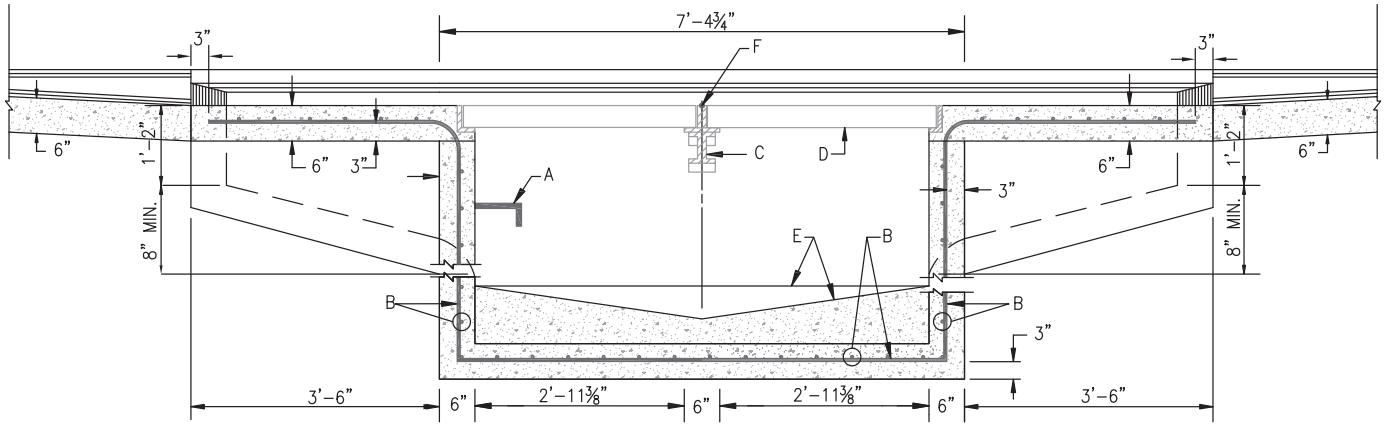

SECTION A-A

GENERAL NOTES

1. SEE DWG. 2202 FOR TYPE "A" INLET SECTIONS B-B, C-C, D-D, AND E-E.
2. FOR STORM INLET GUTTER TRANSITION, SEE DWG. 2207.
3. OUTLET PIPE SIZE, PER DESIGN REQUIREMENT. (MAXIMUM SIZE = 24")
4. MAXIMUM INLET DEPTH = 10'. FOR DEPTHS EXCEEDING 10', A SEPARATE STRUCTURAL DESIGN WILL BE REQUIRED.
5. FOR FRAME & GRATING, SEE DWG. 2216, 2220 OR 2221.
6. "DRAINS TO RIVER" ALUMINUM MEDALLION SHALL BE INSTALLED ON EACH NEW STORM INLET. THE MEDALLION IS TO BE INSTALLED PER MANUFACTURER INSTRUCTIONS IN THE CENTER OF THE INLET, WITH THE BOLT HOLE 6 INCHES FROM THE FRONT OF THE INLET.

CONSTRUCTION NOTES

A. FOR STORM INLET DEPTHS GREATER THAN 4', INSTALL STD. STEPS, SEE DWG. 2229.

B. NO. 4 BARS AT 6" O.C. EACH WAY.

C. CENTER SUPPORT ASSEMBLY. SEE DWG. 2215.

D. GRATE AND FRAME.

E. CONCRETE FILL, SHAPE PER DWG 2222.

F. CONTROL POINT FOR TOP OF GRATE ELEVATION AND HORIZONTAL CONTROL.

REVISIONS	CITY OF ALBUQUERQUE
	DRAINAGE STORM INLET TYPE "DBL A-DBL WING" PLAN AND SECTION A-A DWG. 2201C JUNE 2019

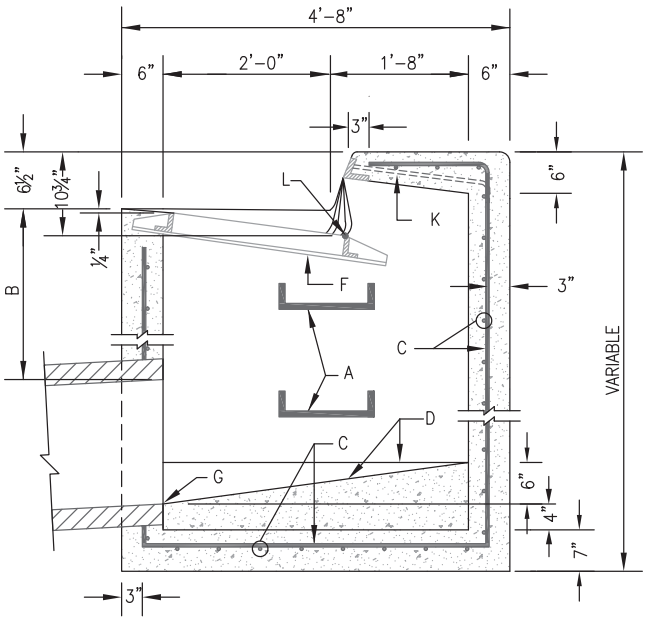

SECTION B-B

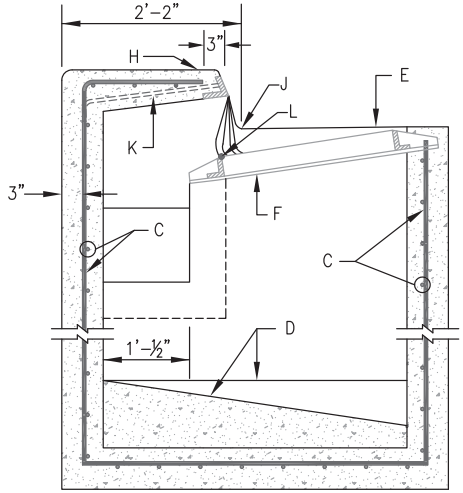

SECTION C-C

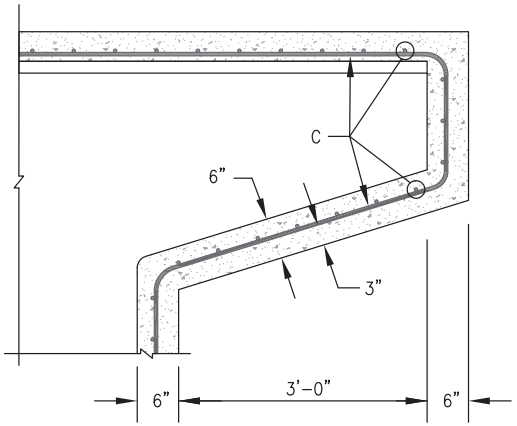

SECTION D-D

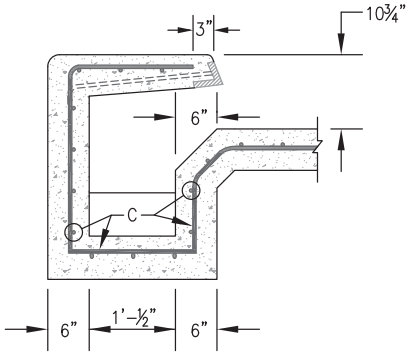

SECTION E-E

GENERAL NOTES

1. SEE DWGS. 2201, 2201A, 2201B, 2201C FOR PLAN AND SECTION A-A.
2. GENERAL NOTES 2, 3 & 4 ON DWG. 2201 ALSO APPLY TO THIS DRAWING.
3. FOR ANCHOR DETAIL, SEE DWG. 2205.

CONSTRUCTION NOTES

A. STORM INLET STEPS, SEE DWG. 2229 FOR SPACING.

B. 1'-10" MIN. UNLESS OTHERWISE DIRECTED.

C. NO. 4 BARS AT 6" O. C. EACH WAY.

D. CONCRETE FILL, SHAPE PER DWG 2222.

E. NORMAL GUTTER.

F. GRATE AND FRAME.

G. INVERT ELEVATION PER DESIGN.

H. TOP OF CURB.

J. FLOWLINE.

K. ANGLE ANCHOR.

L. CONTROL POINT FOR TOP OF GRATE ELEVATION AND HORIZONTAL CONTROL.

REVISIONS	CITY OF ALBUQUERQUE
	DRAINAGE STORM INLET TYPE "A" SECTIONS B-B, C-C, D-D, & E-E DWG. 2202 JUNE 2019

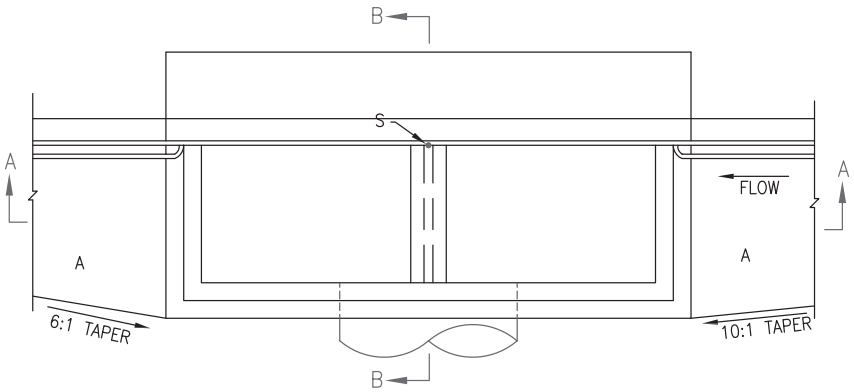

PLAN

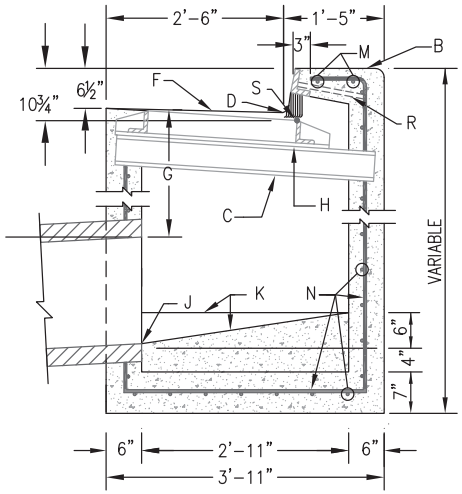

SECTION B-B

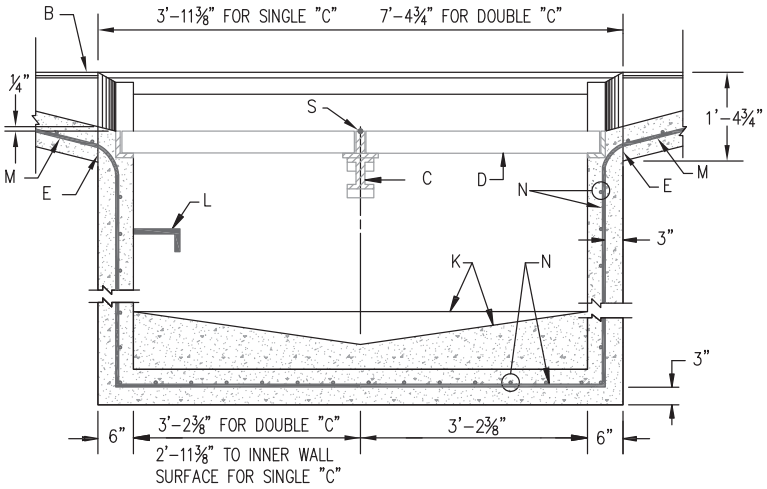

SECTION A-A

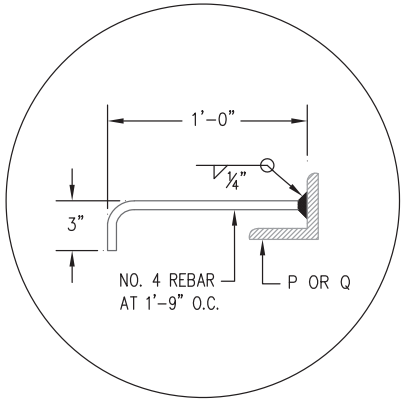

ANCHOR DETAIL

GENERAL NOTES

1. FOR SINGLE GRATE TYPE STORM INLET DELETE CENTER SUPPORT AND MOVE ONE END WALL TO FORM NEW SINGLE GRATE INLET.
2. FOR STORM INLET GUTTER TRANSITION, SEE DWG. 2207.
3. OUTLET PIPE SIZE, PER DESIGN REQUIREMENT. (MAXIMUM SIZE = 24")
4. MAXIMUM INLET DEPTH = 10'. FOR DEPTHS EXCEEDING 10', A SEPARATE STRUCTURAL DESIGN WILL BE REQUIRED.
5. FOR FRAME & GRATING, SEE DWG. 2216, 2220, AND 2221.
6. FOR CENTER SUPPORT ASSEMBLY, SEE DWG. 2215.
7. FOR USE WHERE A TYPE-A INLET EXISTS LESS THAN 150' UPSTREAM.
6. "DRAINS TO RIVER" ALUMINUM MEDALLION SHALL BE INSTALLED ON EACH NEW STORM INLET. THE MEDALLION IS TO BE INSTALLED PER MANUFACTURER INSTRUCTIONS IN THE CENTER OF THE INLET, WITH THE BOLT HOLE 6 INCHES FROM THE FRONT OF THE INLET.

CONSTRUCTION NOTES

A. GUTTER TRANSITION.

B. TOP OF CURB.

C. CENTER SUPPORT ASSEMBLY (DOUBLE INLETS). SEE STD. DWG. 2215.

D. FLOWLINE.

E. CONSTRUCTION JOINT.

F. NORMAL GUTTER LINE.

G. 1'-10" MIN., UNLESS OTHERWISE DIRECTED.

H. FRAME AND GRATE.

J. INVERT OF OUTLET PIPE.

K. CONCRETE FILL, SHAPE PER DWG 2222.

L. FOR STORM INLET DEPTHS GREATER THAN 4', INSTALL STD STEPS PER DWG. 2229, DOWNSTREAM FACE.

M. EXTEND NO. 4 REBARS 18" INTO CURB ON EACH SIDE OF STORM INLET.

N. NO. 4 BARS AT 6" O.C.

P. L 3½ x 3½ x ½ X 4'-0" LONG FOR SINGLE GRATE TYPE "C" STORM INLET.

Q. L 3½ x 3½ x ½ X 7'-6" LONG FOR DOUBLE GRATE TYPE "C" STORM INLET.

R. ANGLE ANCHOR.

S. CONTROL POINT FOR TOP OF GRATE ELEVATION AND HORIZONTAL CONTROL.

REVISIONS	CITY OF ALBUQUERQUE
	DRAINAGE
	STORM INLET TYPE "C"
	DWG. 2205 JUNE 2019

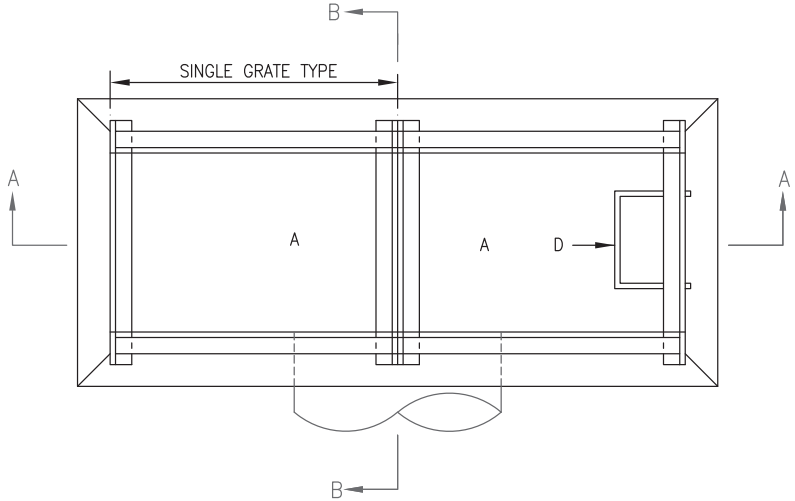

PLAN

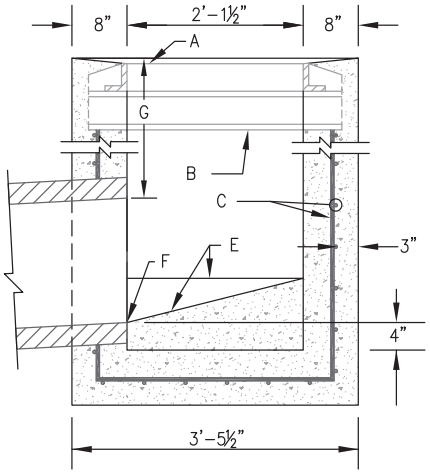

SECTION B-B

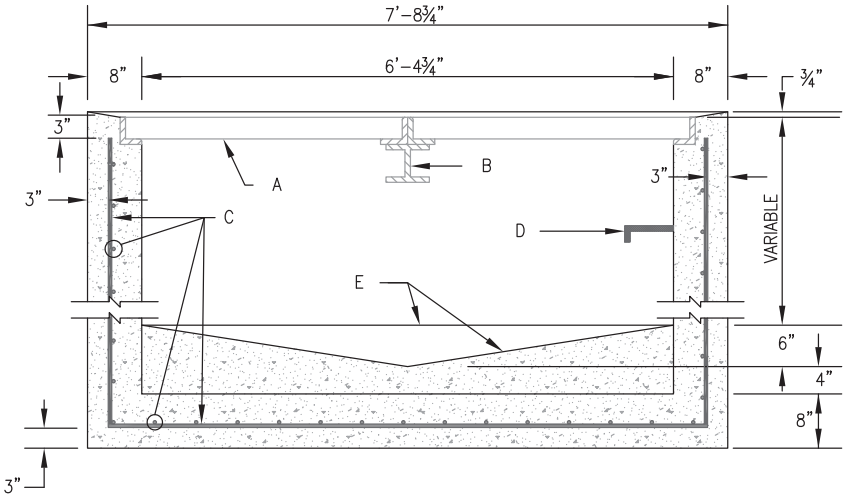

SECTION A-A

GENERAL NOTES

1. FOR SINGLE GRATE TYPE STORM INLET, DELETE CENTER SUPPORT AND MOVE ONE END WALL TO FORM NEW SINGLE GRATE INLET.
2. STORM INLET GUTTER TRANSITION WILL BE SHOWN ON THE CONSTRUCTION PLANS.
3. OUTLET PIPE SIZE, PER DESIGN REQUIREMENT. (MAXIMUM SIZE = 24")
4. FOR FRAME & GRATING, SEE DWG. 2216, 2220 & 2221.
5. FOR CENTER SUPPORT ASSEMBLY, SEE DWG. 2215.
6. FOR USE WHERE A TYPE-A INLET EXISTS LESS THAN 150' UPSTREAM OR AS AN AREA DRAIN.
6. "DRAINS TO RIVER" ALUMINUM MEDALLION SHALL BE INSTALLED ON EACH NEW STORM INLET. THE MEDALLION IS TO BE INSTALLED PER MANUFACTURER INSTRUCTIONS IN THE CENTER OF THE INLET, WITH THE BOLT HOLE 6 INCHES FROM THE FRONT OF THE INLET.

CONSTRUCTION NOTES

A. FRAME & GRATE.

B. CENTER SUPPORT ASSEMBLY.

C. NO. 4 BARS AT 6" O.C. EACH WAY.

D. FOR STORM INLET DEPTHS GREATER THAN 4', INSTALL STD STEPS PER DWG. 2229, DOWNSTREAM FACE.

E. CONCRETE FILL, SHAPE PER DWG. 2222.

F. INVERT PER DESIGN.

G. 1'-10"MIN., UNLESS OTHERWISE DIRECTED.

REVISIONS	CITY OF ALBUQUERQUE
	DRAINAGE
	STORM INLET TYPE "D"
	DWG. 2206 JUNE 2019

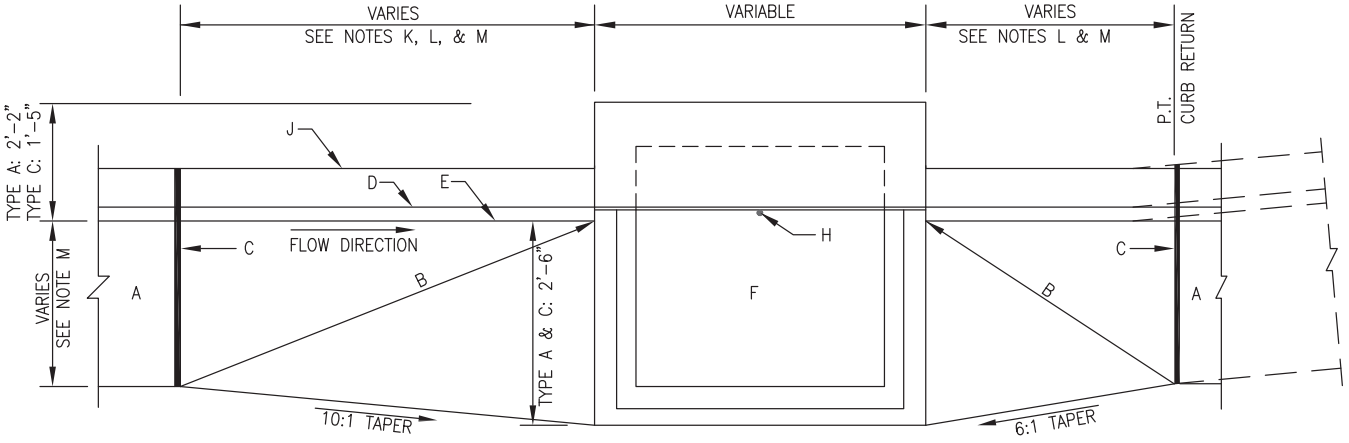

PROFILE

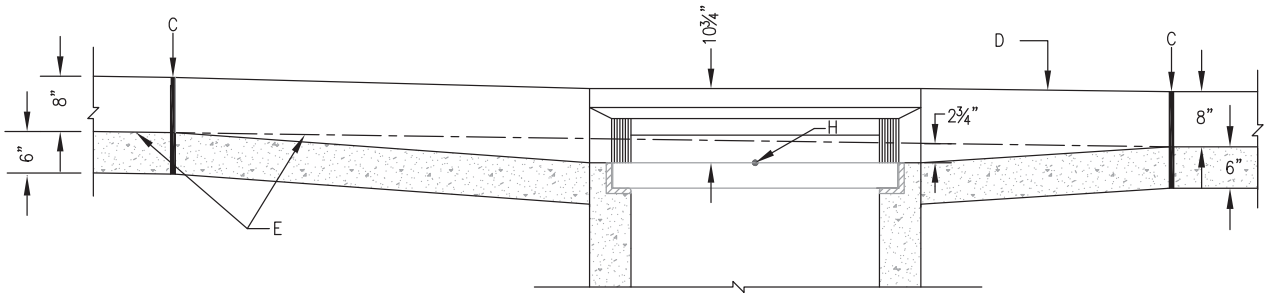

LONGITUDINAL SECTION
ALONG FLOWLINE

GENERAL NOTES

1. LOCATION DETAILS FOR PLACING INLETS AND STANDARD CURB AND GUTTER ARE TO BE SHOWN ON DESIGN PLANS.

2. CURB HEIGHT WILL BE 8" AT OUTER LIMITS OF DETAIL. ANY TRANSITION TO DIFFERENT HEIGHT CURB WILL OCCUR OUTSIDE THE LIMITS OF THIS DETAIL AND MUST BE SPECIFIED SEPARATELY ON THE PLANS.

CONSTRUCTION NOTES

A. STANDARD CURB AND GUTTER.

B. STRAIGHT GRADE.

C. EXPANSION JOINT.

D. TOP OF CURB.

E. FLOWLINE PER PLAN.

F. FOR FRAME & GRATE SEE DWG. 2216, 2220 & 2221.

G. DIRECTION OF FLOW.

H. CONTROL POINT FOR TOP OF GRATE ELEVATION AND HORIZONTAL CONTROL.

J. BACK OF CURB.

K. WHEN INSTALLING AT SAG POINT AND SUMP CONDITIONS NOT ADJACENT TO A CURB RETURN, PROVIDE THE 10:1 TAPER ON EACH SIDE.

L. THE TAPER SHALL GOVERN THE LENGTH OF THE TRANSITION SLAB.

M. FOR INLETS PROTRUDING 2'-6" FROM FLOWLINE, TRANSITION SLAB LENGTHS ARE AS FOLLOWS:

GUTTER	TRANSITION SLAB LENGTH	
PAN WIDTH	UPSTREAM SLAB	DOWNSTREAM SLAB
12"	15'	9'
18"	10'	6'
24"	5'	3'

REVISIONS	CITY OF ALBUQUERQUE
	DRAINAGE
	STORM INLET GUTTER TRANSITION
	DWG. 2207 JUNE 2019

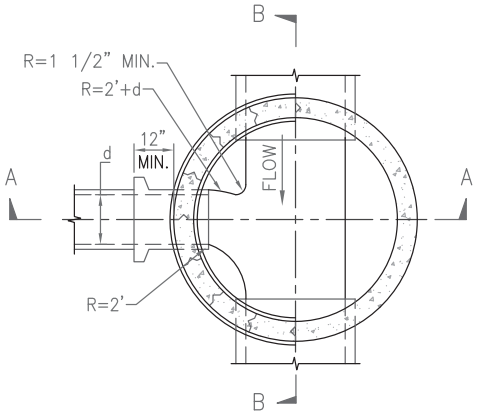

PLAN AT C–C

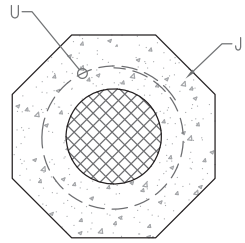

PLAN AT D–D

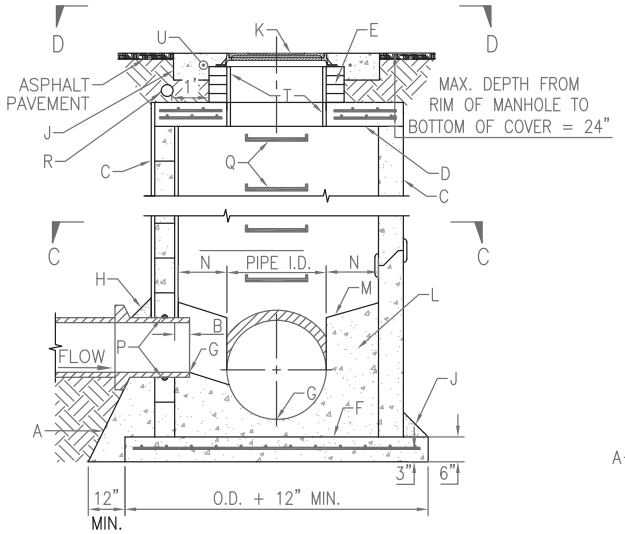

CROSS SECTION A–A

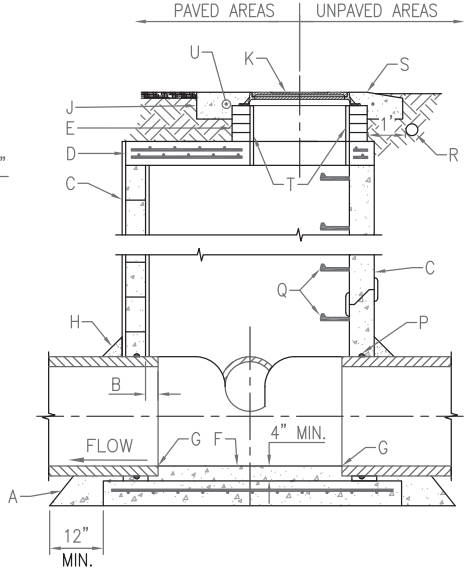

CROSS SECTION B–B

GENERAL NOTES

1. USE TYPE "C" MANHOLE FOR DEPTHS OF LESS THAN 6' MEASURED FROM INVERT TO RIM.
2. CONTRACTOR HAS OPTION TO CONSTRUCT TYPE "C" MANHOLE IN LIEU OF TYPE "E" MANHOLE FOR DEPTHS OF 6' OR MORE.
3. MANHOLES GREATER THAN 18' IN DEPTH SHALL BE CONSTRUCTED OF PRECAST CONCRETE SECTIONS ONLY.
4. DESIGN APPLIES TO 4' TO 6' I.D. MANHOLES.
5. COMPACT ALL BACKFILL AROUND MANHOLE TO 95% (ASTM).
6. USE NON–SHRINK GROUT FOR JOINTS, FILLETS AND PIPE PENETRATIONS.
7. POSITION MANHOLE OPENING OVER THE UPSTREAM SIDE OF MAIN LINE.
8. MANHOLES GREATER THAN 20' IN DEPTH WILL REQUIRE A SEPARATE STRUCTURAL DESIGN.

CONSTRUCTION NOTES

A. CONCRETE PIPE SUPPORTS SHALL EXTEND OUTSIDE OF MANHOLE TO BELL OF FIRST JOINT AND SHALL CRADLE PIPE TO SPRING LINE. NOT APPLICABLE FOR FLEXIBLE PIPE.

B. PIPE PENETRATION INTO MANHOLE SHALL BE FLUSH TO 2" MAX., MEASURED AT SPRINGLINE OF PIPE.

C. MANHOLE MAY BE CONSTRUCTED OF CONCRETE BLOCK, POURED CONCRETE, OR PRECAST REINFORCED CONCRETE. IF BLOCK IS USED, APPLY 1/2" THICK MORTAR COATING TO EXTERIOR AND INTERIOR OF MANHOLE. IF PRECAST CONCRETE IS USED, USE MASTIC GASKETS AND APPLY NON–SHRINK GROUT TO EXTERIOR AND INTERIOR OF EXPANSION JOINTS OR USE WATERTIGHT RUBBER GASKETS. IF RUBBER GASKETS ARE USED, THE MANHOLE SECTIONS DO NOT NEED TO BE GROUTED BUT THE MANUFACTURER MUST STAMP THE INTERIOR OF EACH PRECAST SECTION WITH THE TYPE OF GASKET USED.

D. PRECAST CONCRETE TOP SLAB, SEE STANDARD DRAWING 2212.

E. USE MAX. 4 COURSES GRADE MS BRICK ON UNPAVED STREET FOR FUTURE ADJUSTMENT OF MANHOLE FRAME TO PAVEMENT GRADE.

F. CONCRETE BASE TO BE POURED IN PLACE USING NO. 4 BARS AT 6" O.C. EACH WAY FOR MANHOLE DEPTHS OF 16' OR GREATER. NO. 4 BARS AT 12" O.C. EACH WAY FOR MANHOLE DEPTH OF LESS THAN 16'.

G. INVERT ELEVATION AS SHOWN ON PLANS. PROVIDE 0.10' (MINIMUM) OF FALL BETWEEN INVERT(S)–IN AND INVERT–OUT.

H. 6" GROUT FILLET ON UPPER HALF OF PIPE AND AROUND BASE.

J. OCTAGONAL CONCRETE PAD, SEE STANDARD DWG. 2461 FOR REFERENCE.

K. MANHOLE FRAME AND COVER, SEE DRAWING 2210.

L. CONCRETE, SEE SPECIFICATION SECTION 101.

M. SLOPE 1" PER FT. FROM PIPE CROWN.

N. SHELF TO BE 9" WIDE MIN.

P. APPROVED WATERSTOP TO BE COMPATIBLE WITH TYPE OF PIPE.

Q. STEPS TO BE INSTALLED PER STANDARD SPECIFICATION SECTION 920 AND DRAWING 2229.

R. ELECTRONIC MARKER DEVICE (EMD). SEE STANDARD SPECIFICATION SECTION 170.

S. CONCRETE COLLAR IN UNPAVED AREAS, SEE STANDARD DRAWING 2461.

T. APPLY 1/2" THICK MORTAR COATING TO INTERIOR OF OPENING.

U. #4 REBAR PER STANDARD DRAWING 2461.

V. TOP OF CONCRETE COLLAR SHALL BE STAMPED WITH LINE SIZE AND FLOW DIRECTION ARROWS. MINIMUM LETTER SIZE SHALL BE 3" IN HEIGHT.

REVISIONS	CITY OF ALBUQUERQUE
	DRAINAGE STORM SEWER MANHOLE TYPE "C" DWG. 2208 JUNE 2019

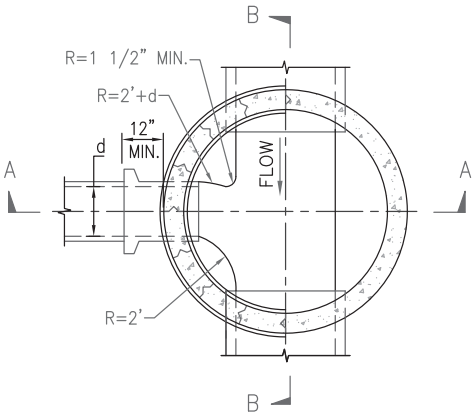

PLAN AT C–C

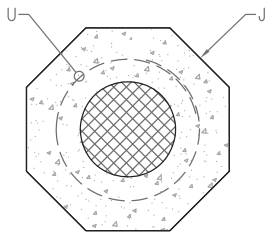

PLAN AT D–D

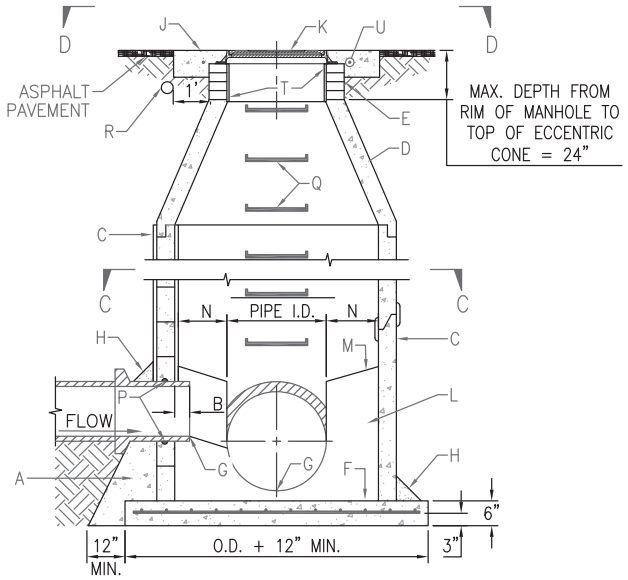

CROSS SECTION A–A

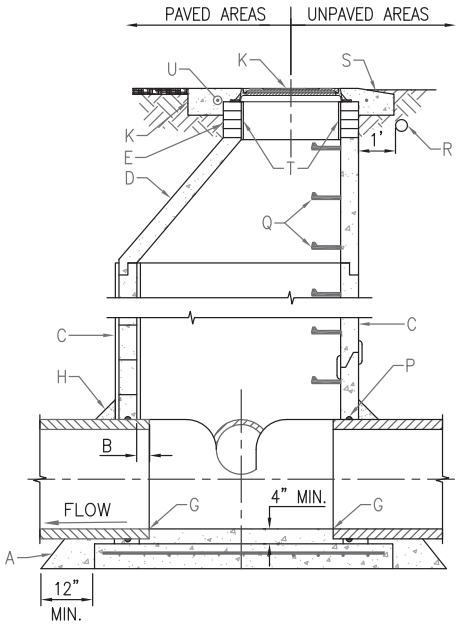

CROSS SECTION B–B

GENERAL NOTES

1. USE TYPE "E" MANHOLE FOR DEPTHS OF 6' OR GREATER, MEASURED FROM INVERT TO RIM.
2. CONTRACTOR HAS OPTION TO CONSTRUCT TYPE "C" MANHOLE IN LIEU OF TYPE "E" MANHOLE FOR DEPTHS OF 6' OR LESS.
3. MANHOLES GREATER THAN 18' IN DEPTH SHALL BE CONSTRUCTED OF PRECAST CONCRETE SECTIONS ONLY.
4. DESIGN APPLIES TO 4' TO 6' I.D. MANHOLES.
5. COMPACT ALL BACKFILL AROUND MANHOLE TO 95% (ASTM).
6. USE NON–SHRINK GROUT FOR JOINTS, FILLETS AND PIPE PENETRATIONS.
7. POSITION MANHOLE OPENING OVER THE UPSTREAM SIDE OF MAIN LINE.
8. MANHOLES GREATER THAN 20' IN DEPTH WILL REQUIRE A SEPARATE STRUCTURAL DESIGN.

CONSTRUCTION NOTES

A. CONCRETE PIPE SUPPORTS SHALL EXTEND OUTSIDE OF MANHOLE TO BELL OF FIRST JOINT AND SHALL CRADLE PIPE TO SPRING LINE. NOT APPLICABLE FOR FLEXIBLE PIPE.

B. PIPE PENETRATION INTO MANHOLE SHALL BE FLUSH TO 2" MAX., MEASURED AT SPRINGLINE OF PIPE.

C. MANHOLE MAY BE CONSTRUCTED OF CONCRETE BLOCK, POURED CONCRETE, OR PRECAST REINFORCED CONCRETE. IF BLOCK IS USED, APPLY 1/2" THICK MORTAR COATING TO EXTERIOR AND INTERIOR OF MANHOLE. IF PRECAST CONCRETE IS USED, USE MASTIC GASKETS AND APPLY NON–SHRINK GROUT TO EXTERIOR AND INTERIOR OF EXPANSION JOINTS OR USE WATERTIGHT RUBBER GASKETS. IF RUBBER GASKETS ARE USED, THE MANHOLE SECTIONS DO NOT NEED TO BE GROUTED BUT THE MANUFACTURER MUST STAMP THE INTERIOR OF EACH PRECAST SECTION WITH THE TYPE OF GASKET USED.

D. PRECAST REINFORCED CONCRETE ECCENTRIC CONE. THE CONTRACTOR SHALL PROVIDE SHOP DRAWINGS FOR APPROVAL.

E. USE MAX. 4 COURSES GRADE MS BRICK ON UNPAVED STREET FOR FUTURE ADJUSTMENT OF MANHOLE FRAME TO PAVEMENT GRADE.

F. CONCRETE BASE TO BE POURED IN PLACE USING NO. 4 BARS AT 6" O.C. EACH WAY FOR MANHOLE DEPTHS OF 16' OR GREATER. NO. 4 BARS AT 12" O.C. EACH WAY FOR MANHOLE DEPTH OF LESS THAN 16'.

G. INVERT ELEVATION AS SHOWN ON PLANS. PROVIDE 0.10' (MINIMUM) OF FALL BETWEEN INVERT(S)–IN AND INVERT–OUT.

H. 6" GROUT FILLET ON UPPER HALF OF PIPE AND AROUND BASE.

J. OCTAGONAL CONCRETE PAD, SEE STANDARD DWG. 2461 FOR REFERENCE.

K. MANHOLE FRAME AND COVER, SEE DRAWING 2210.

L. CONCRETE, SEE SPECIFICATION SECTION 101.

M. SLOPE 1" PER FT. FROM PIPE CROWN.

N. SHELF TO BE 9" WIDE MIN.

P. APPROVED WATERSTOP TO BE COMPATIBLE WITH TYPE OF PIPE.

Q. STEPS TO BE INSTALLED PER STANDARD SPECIFICATION SECTION 920 AND DRAWING 2229.

R. ELECTRONIC MARKER DEVICE (EMD). SEE STANDARD SPECIFICATION SECTION 170.

S. CONCRETE COLLAR IN UNPAVED AREAS, SEE STANDARD DRAWING 2461.

T. APPLY 1/2" THICK MORTAR COATING TO INTERIOR OF OPENING.

U. #4 REBAR PER STANDARD DRAWING 2461.

REVISIONS	CITY OF ALBUQUERQUE
	DRAINAGE STORM SEWER MANHOLE TYPE "E" DWG. 2209 JUNE 2019

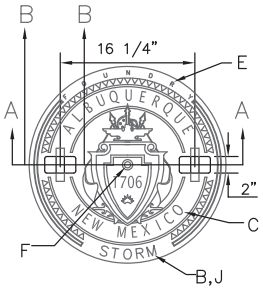

24" MANHOLE
TOP VIEW

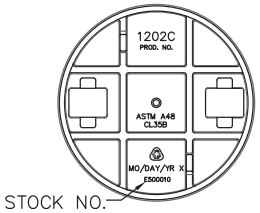

24" MANHOLE
BOTTOM VIEW

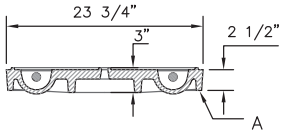

24" MANHOLE COVER
SECTION A–A

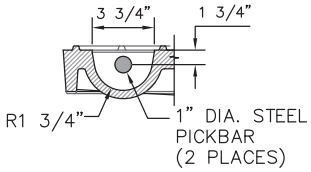

24" MANHOLE COVER
PICKBAR SECTION B–B

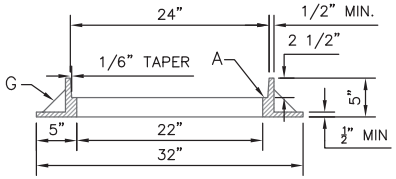

24" MANHOLE FRAME
SECTION A–A

24" GENERAL NOTES

1. STANDARD 24" CAST IRON M.H. FRAME AND COVER. WEIGHTS: COVER = 180 LBS., FRAME = 145 LBS. TOTAL = 325 LBS. (TOLERANCE = ±5%)
2. REFERENCE SPEC. SECTION 130.

36" GENERAL NOTES

1. STANDARD 36" CAST IRON M.H. FRAME AND COVER. WEIGHTS: COVER = 355 LBS., FRAME = 315 LBS. TOTAL = 670 LBS. (TOLERANCE = ±5%)
2. REFERENCE SPEC. SECTION 130.

CONSTRUCTION NOTES

A. MACHINED OR GROUND BEARING SURFACES.

B. "STORM" CAST ON COVER TO IDENTIFY STORM DRAINAGE.

C. LETTER SIZE TO BE 1 1/4" IN HEIGHT RAISED LETTERING.

D. LETTER SIZE TO BE 3/4" IN HEIGHT RAISED LETTERING.

E. LETTER SIZE TO BE 3/8" MIN. IN HEIGHT RAISED LETTERING.

F. 3/4" DIA VENT HOLE REQUIRED.

G. GUSSETS OPTIONAL IF REQUIRED BY MANUFACTURER.

H. 2" LETTERS (RECESSED FLUSH).

J. LETTER SIZE TO BE 1" IN HEIGHT RAISED LETTERING.

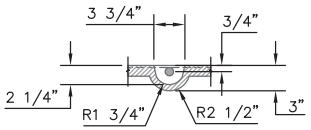

36" MANHOLE COVER
PICKBAR SECTION D–D

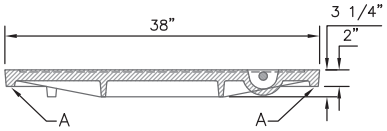

36" MANHOLE COVER
SECTION C–C

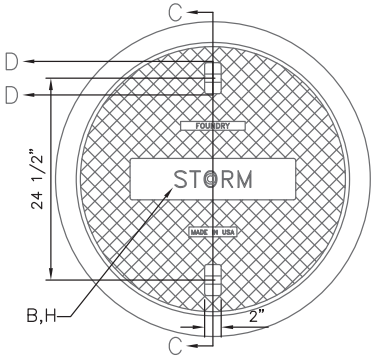

36" MANHOLE
TOP VIEW

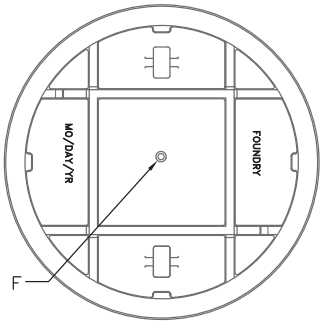

36" MANHOLE
BOTTOM VIEW

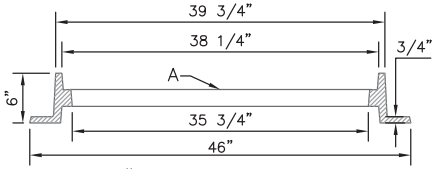

36" MANHOLE FRAME
SECTION C–C

REVISIONS	CITY OF ALBUQUERQUE
	DRAINAGE STORM MANHOLE FRAME AND COVER DWG. 2210 JUNE 2019

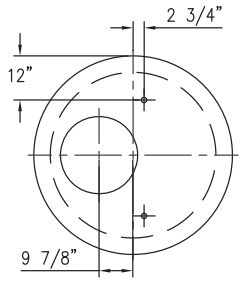

4' I.D. MH

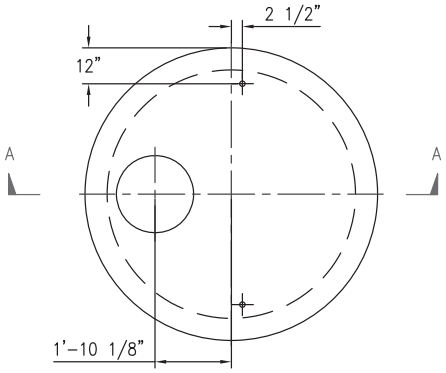

6' I.D. MH

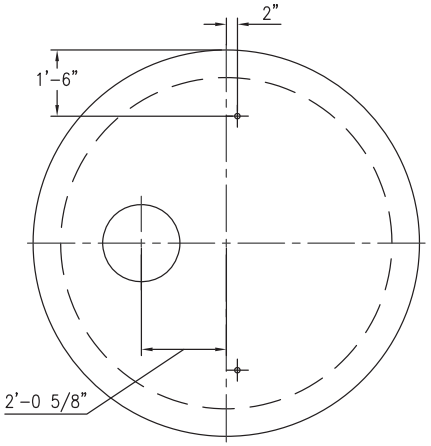

8' I.D. MH

PLAN

CONSTRUCTION NOTES

A. PRECAST REINFORCED CONCRETE MANHOLE TOP SLAB.

B. ALL BARS TO HAVE 1 1/2" MIN. COVER.

C. 1" PIPE SLEEVE VERTICALLY THROUGH TOP SLAB.

D. TOP MAT NO. 4 BARS 6" O.C. EACH WAY FOR 4', 6' AND 8' I.D. MANHOLES.

E. NO. 4 BARS

F. BOTTOM MAT NO. 4 BARS 6" O.C. EACH WAY FOR 4' AND 6' I.D. MANHOLES, NO. 8 BARS 8" O.C. EACH WAY FOR 8' I.D. MANHOLES.

G. NO. 4 BARS FOR 4' AND 6' I.D. MANHOLES.

H. WHEN PRECAST MANHOLE SECTIONS ARE USED, TOP SLAB SHALL BE MODIFIED TO SHAPE OF APPROPRIATE SIZE TONGUE AND GROOVE JOINT.

J. CONCRETE, SEE SECTION 101.

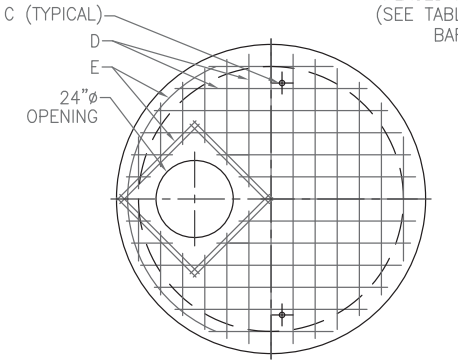

SECTION B-B
TOP MAT

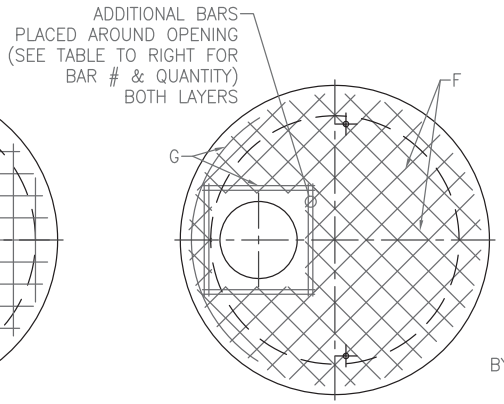

SECTION C-C
BOTTOM MAT

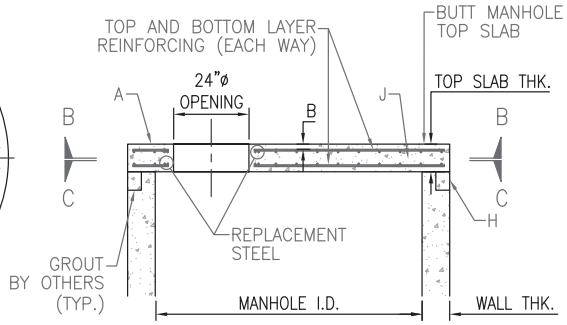

SECTION A-A
FLAT TOP SLAB REINFORCEMENT DETAIL

MANHOLE I.D.	48"	60"	72"	96"	120"
TOP SLAB THK.	8"	8"	8"	10"	10"
WALL THK.	5"	6"	7"	9"	11"
TOP LAYER STEEL (IN^2/FT)	0.40	0.40	0.40	0.40	0.40
BTM LAYER STEEL (IN^2/FT)	0.40	0.43	0.50	1.19	1.19
REPLACEMENT STEEL (BAR #)	(8)#5's	(8)#5's	(8)#6's	(8)#8's	(8)#8's
APPROX. WEIGHT (LBS.)	1,521	2,513	3,720	8,468	13,355

NOTES:
1) f'c = 4000 psi (MIN.)
2) fy = 60,000 (MIN.)
3) 1 1/2" MINIMUM CLEAR CONCRETE COVER OVER REINFORCEMENT
4) HS-20 LIVE LOAD
5) SEE TABLE FOR APPROXIMATE WEIGHT

REVISIONS	CITY OF ALBUQUERQUE
	DRAINAGE STORM SEWER CONCRETE MANHOLE TOP SLAB TYPE "C" DWG. 2212 JUNE 2019

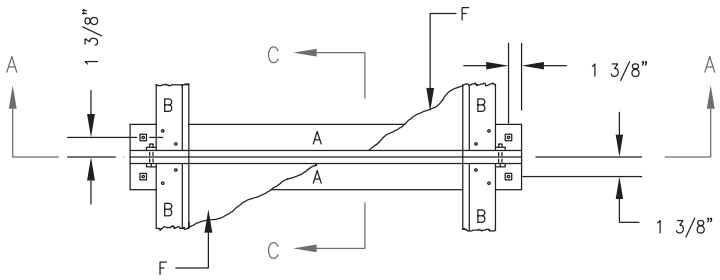

PLAN
ASSEMBLY FOR DOUBLE "D" CATCH BASIN

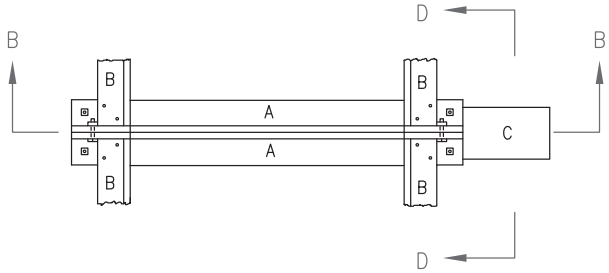

PLAN
ASSEMBLY FOR DOUBLE "C" CATCH BASIN

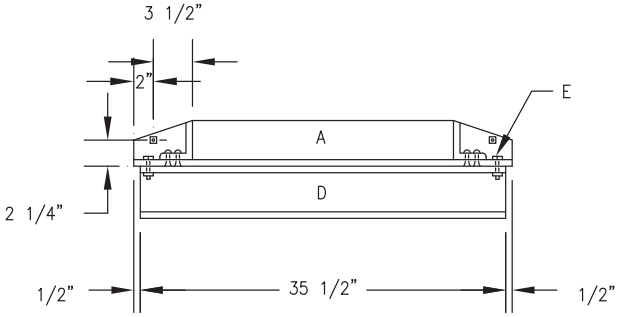

SECTION A–A

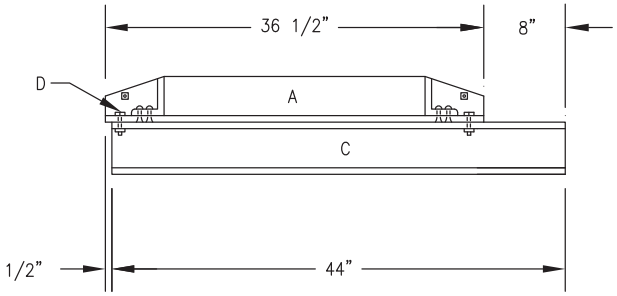

SECTION B–B

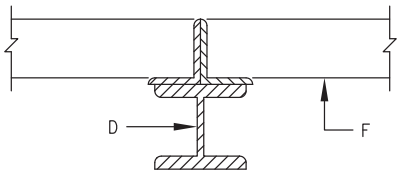

SECTION C–C

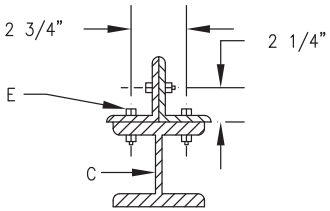

SECTION D–D

GENERAL NOTES

1. ALL BOLTS USED IN CENTER SUPPORT ASSEMBLY SHALL BE 1/2".
2. FRAME MAY BE RIVETED OR WELDED.
3. BOLTS (NOT RIVETS OR WELDS) SHALL BE USED TO JOIN TWO OR MORE FRAMES TOGETHER AND TO THE WIDE FLANGE BEAM.
4. AFTER CLEANING SURFACE OF SCALE, RUST, ETC., GRATING, FRAME AND CENTER SUPPORT SHALL BE PAINTED WITH ONE SHOP COAT RED OXIDE, TWO FINISH COATS ALUMINUM PAINT (AASHTO M 69).

CONSTRUCTION NOTES

A. L4x3x½ X 36½" LONG.

B. L3½x3x⅜ X 40⅜" LONG.

C. W5 X 19 BEAM, FOR CATCH BASIN TYPE DOUBLE "C".

D. W5 X 19 BEAM, FOR CATCH BASIN TYPE DOUBLE "D".

E. 1/2" A325 BOLTS, WITH NUTS TO SECURE ANGLE TO BEAM.

F. FOR FRAME & GRATE SEE DWGS. 2216, 2220, OR 2221.

REVISIONS	CITY OF ALBUQUERQUE
	DRAINAGE STORM INLET CENTER SUPPORT ASSEMBLY DWG. 2215 JUNE 2019

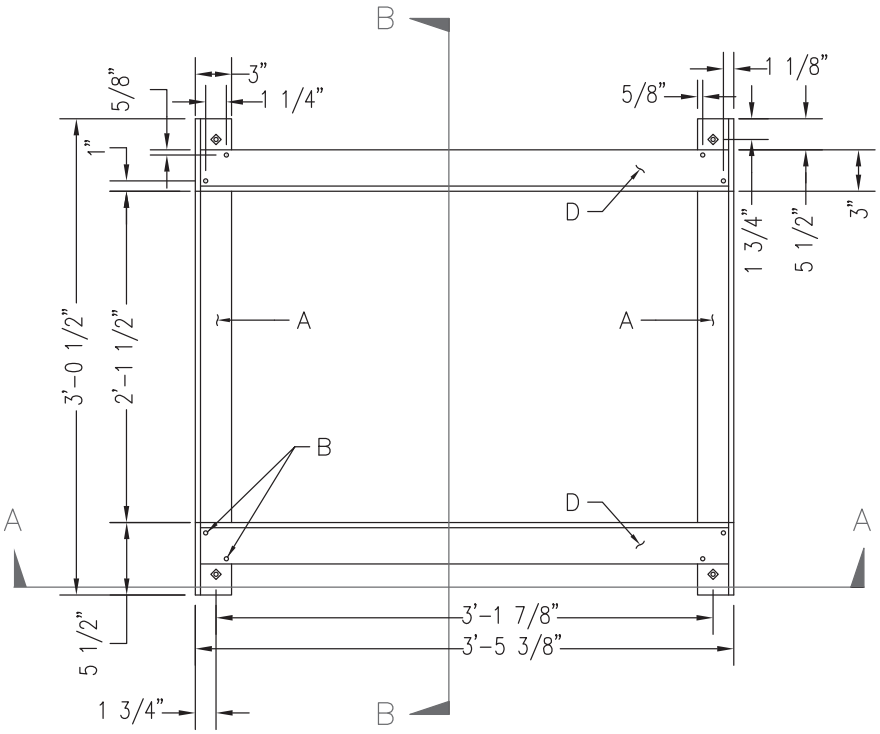

PLAN

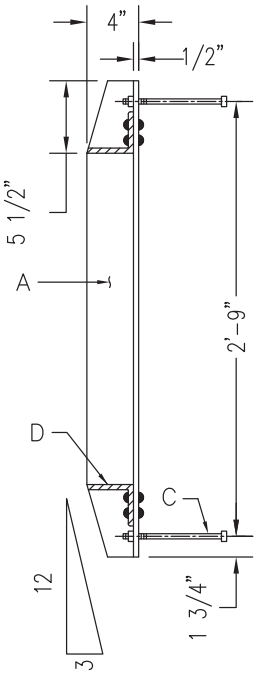

SECTION B–B

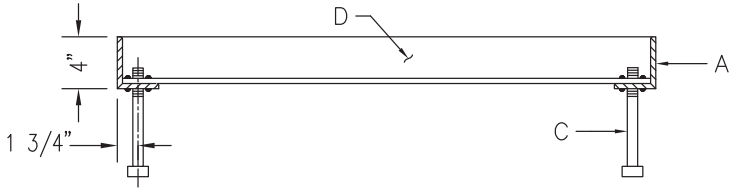

SECTION A–A

GENERAL NOTES

1. ALL EXPOSED METAL PARTS SHALL BE PAINTED PRIOR TO ASSEMBLY. WELDING, MACHINING AND DRILLING SHALL BE DONE PRIOR TO PAINTING. ALL DIMENSIONS ARE FINISH DIMENSIONS.
2. ALL PARTS SHALL BE OF STRUCTURAL STEEL, GRADE 36.
3. AFTER CLEANING SURFACE OF SCALE, RUST, ETC, GRATING FRAME AND CENTER SUPPORT SHALL BE PAINTED WITH ONE SHOP COAT RED OXIDE, TWO FINISH COATS ALUMINUM PAINT (AASHTO M 69)
4. FRAME MAY BE WELDED OR RIVETED.

CONSTRUCTION NOTES

A. 4" X 3" X 1/2" X 3'-1/2" ∠ .

B. (2) 3/8" RIVETS AT EACH CORNER.

C. (4) 1/2" X 8" BOLTS WITH SQUARE HEAD AND NUT AT EACH CORNER. FOR ANCHORING FRAME INTO CONCRETE WALL.

D. 3 1/2" X 3" X 3/8" X 3'-4 3/8" ∠ .

REVISIONS	CITY OF ALBUQUERQUE
	DRAINAGE
	STORM INLET FRAME
	DWG. 2216 JUNE 2019

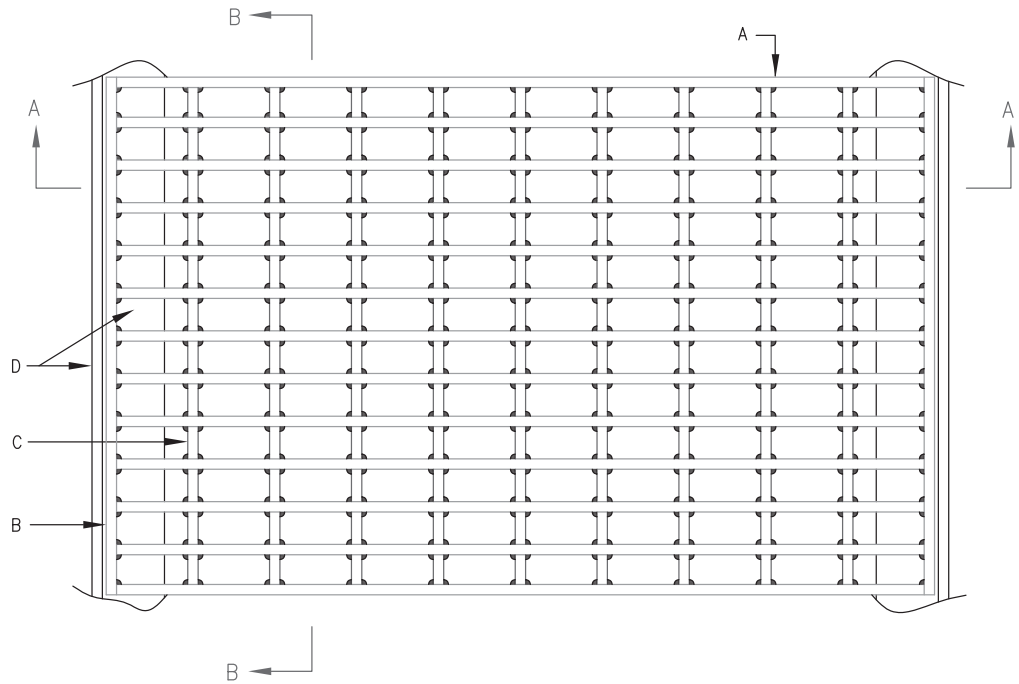

PLAN

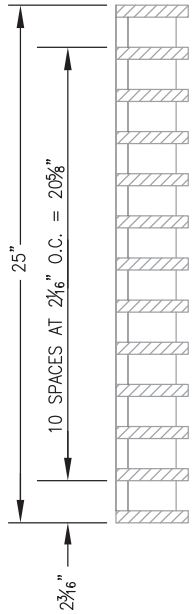

SECTION B–B

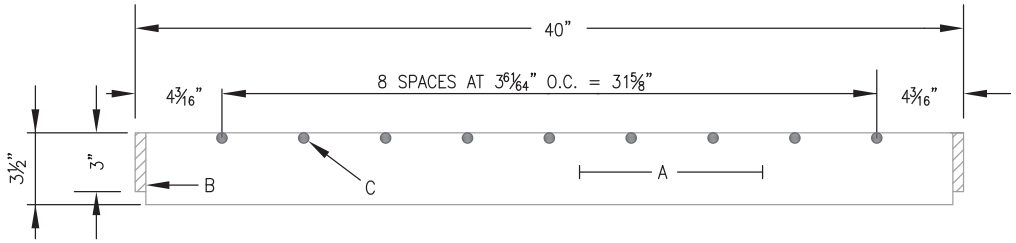

SECTION A–A

GENERAL NOTES

1. ALL BARS SHALL BE GRADE A36 STRUCTURAL STEEL.
2. THE GRATE SHALL BE WELDED WITH 1/8" FILLET WELD AROUND BOTH SIDES OF CROSS BARS, 1/4". FILLET WELD BOTH SIDES OF BEARING BARS TO END BARS.
3. AFTER CLEANING SURFACE OF SCALE, RUST, OILS, ETC., PAINT GRATE WITH ONE SHOP COAT RED OXIDE, TWO FINISH COATS ALUMINUM PAINT (AASHTO M 69).
4. TOP OF CROSS BARS SHALL BE FLUSH WITH TOP OF GRATE.
5. GRIND WELDS FLUSH WITH BEARING BARS.
6. WHEN INSTALLED IN FRAME, PUSH TIGHT TO THE FRAME ON THE ROAD SIDE SO THAT IT IS FLUSH WITH THE FRAME. THE SIDE ALONG THE CURB LINE SIDE SHALL HAVE 1/2" MAX. OPENING. SPACERS WELDED TO FRAME MAY BE USED IF REQUIRED TO KEEP 1/2" SPACE OR LESS.
7. WHEN INSPECTING OR DOING ROAD REHAB PROJECTS, IF THE GRATE IS NOT FLUSH WITH THE FRAME ON THE ROAD SIDE EDGE, COVER PLATES WELDED TO THE FRAME MAY BE USED TO COVER ANY GAPS.
8. INSTALLED VOID SPACE AREA: 3.72 SQUARE FEET OR 536 SQUARE INCHES. VOID SPACE CALCULATED AS TOTAL AREA EXCLUSIVE OF: BEARING BARS, CROSS BARS, END BARS, FRAME, AND WELDS.

CONSTRUCTION NOTES

A. BEARING BARS, (13) PL 1/2 x 3 1/2 x 39".

B. END BARS, (2) PL 1/2 x 3 X 25".

C. CROSS BARS, (9) 1/2ø X 24" ROD.

D. FRAME, SEE DWG. 2216.

REVISIONS	CITY OF ALBUQUERQUE
	DRAINAGE STORM INLET ALBUQUERQUE GRATE DWG. 2220 JUNE 2019

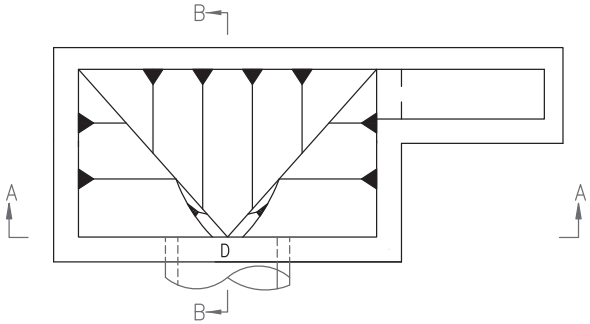

PLAN
DROP INLET WITH OUTLET PIPE ONLY

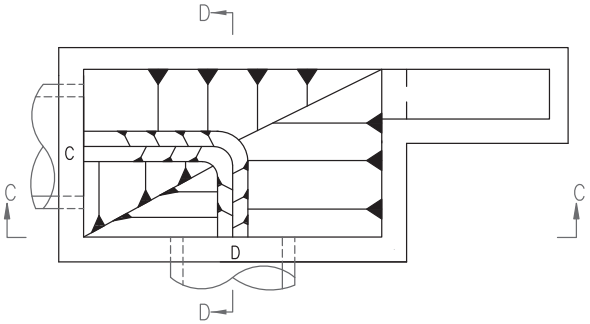

PLAN
DROP INLET WITH INLET AND OUTLET PIPES

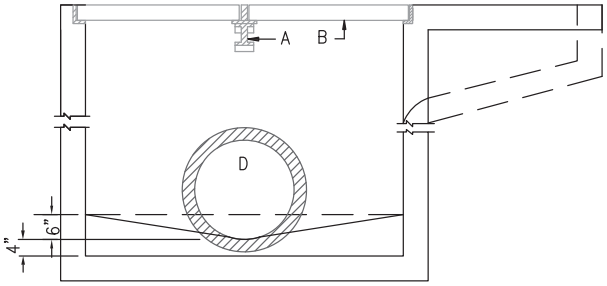

SECTION A–A

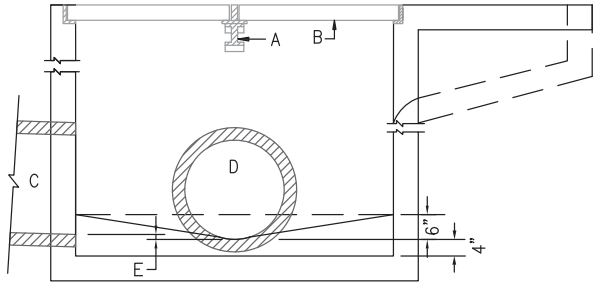

SECTION C–C

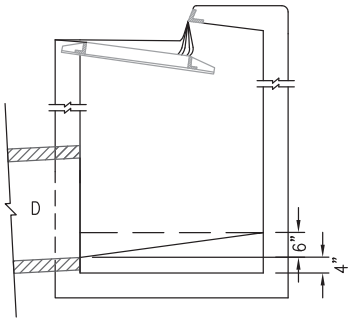

SECTION B–B

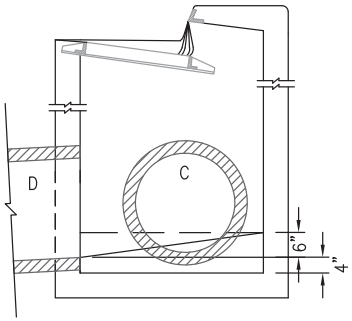

SECTION D–D

GENERAL NOTES

1. CONCRETE FILL FOR INLET SHAPING TO BE 3000 PSI (MIN), NON–REINFORCED.

CONSTRUCTION NOTES

A. CENTER SUPPORT ASSEMBLY, SEE DWG 2229.

B. GRATE AND FRAME.

C. INLET PIPE.

D. OUTLET PIPE.

E. PROVIDE 0.1' OF FALL BETWEEN INVERT IN AND INVERT OUT.

REVISIONS	CITY OF ALBUQUERQUE
	DRAINAGE
	STORM INLET SHAPING
	DWG. 2222 JUNE 2019

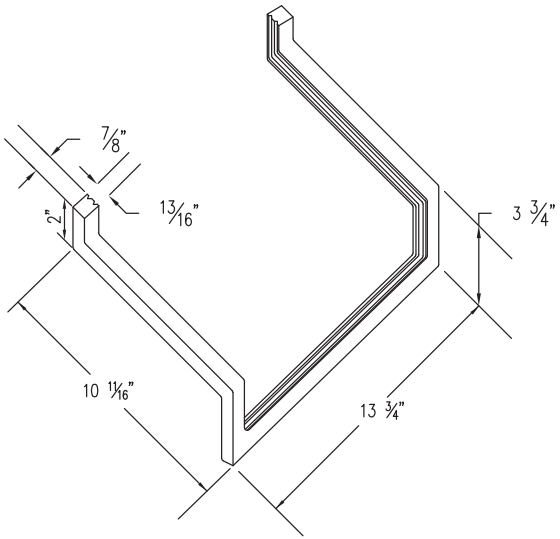

ALUMINUM STEP DETAIL

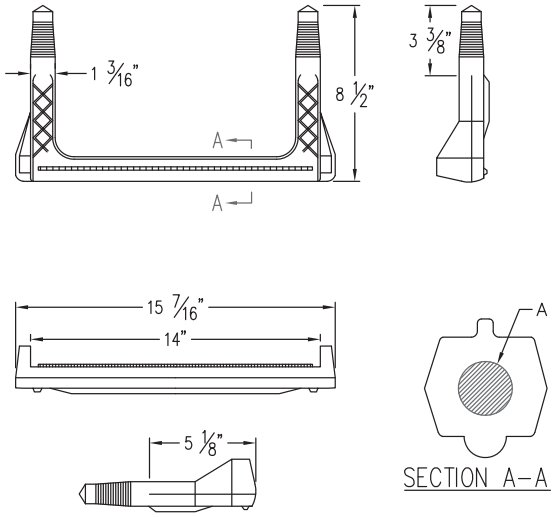

SECTION A–A

ALTERNATE STEP DETAIL

GENERAL NOTES

1. ALUMINUM STEP, ALCOA NO. 12653A OR APPROVED EQUAL.
2. ALTERNATE STEP SHALL BE POLYPROPELENE MOLDED OVER ½" STEEL REINFORCEMENT, MODEL NO. PS–2PFS, M.A INDUSTRIES INC., OR APPROVED EQUAL
3. STORM INLETS: INLETS GREATER THAN 4' DEEP SHALL HAVE STEPS INSTALLED IN DOWNSTREAM FACE OF INLET WALLS.
4. STEPS SHALL PROTRUDE 7" FROM THE WALL AND SHALL BE CENTERED 12" FROM FACE OF CURB.
5. STEPS SHALL BE 12" APART, WITH THE TOP STEP ±18" FROM TOP OF GRATE AND THE BOTTOM STEP NO MORE THAN 16" ABOVE THE CONCRETE FILL IN THE BOTTOM OF THE INLET.
6. DRAINAGE CHANNELS: CHANNELS SHALL HAVE STEPS FOR ACCESS AND RESCUE INSTALLED PER DETAILS ON DWG. 2261.
7. STEPS SHALL BE INSTALLED ON BOTH SIDES OF THE CHANNEL AND SHALL BE LOCATED IMMEDIATELY BEFORE THE INLET AND AFTER OUTLET TRANSITIONS FOR CROSSING STRUCTURES AND AT 700' MAXIMUM SPACING ALONG CHANNELS OR AS NOTED ON THE PLANS.

CONSTRUCTION NOTES

A. ½" GRADE 60 STEEL REINFORCEMENT.

REVISIONS	CITY OF ALBUQUERQUE
	DRAINAGE
	STEP DETAILS
	DWG. 2229 JUNE 2019

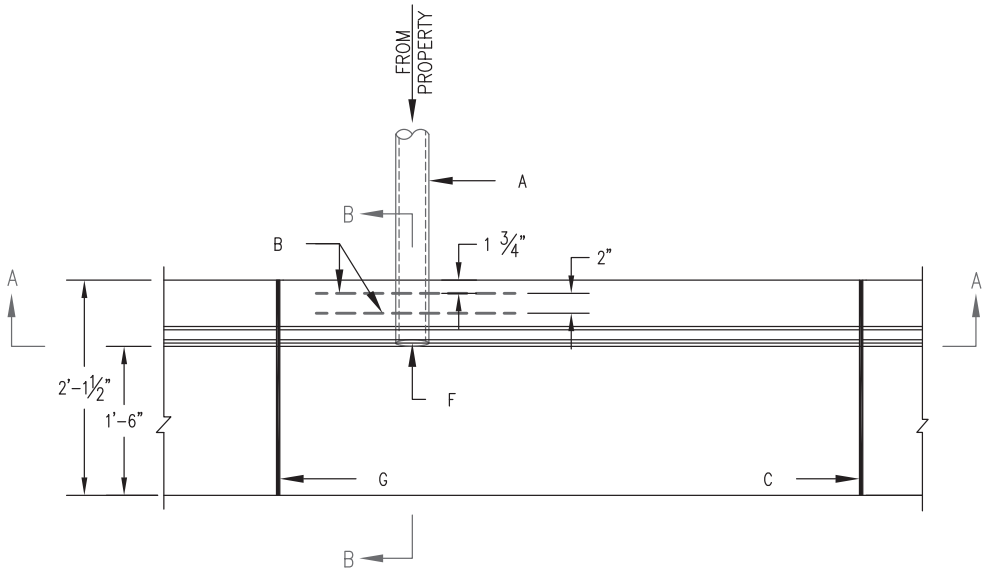

PLAN

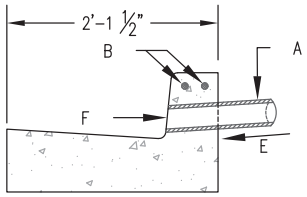

SECTION B-B

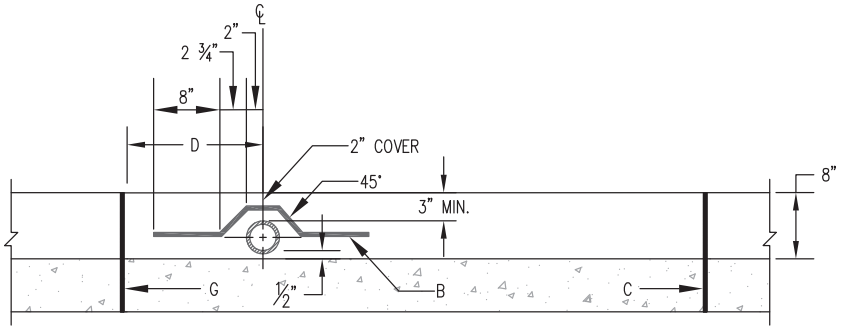

SECTION A-A

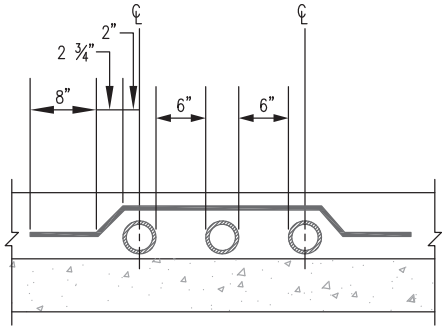

ALTERNATIVE DETAIL
FOR MULTIPLE DRAINLINES

GENERAL NOTES

1. WHEN PLACING DRAIN THROUGH EXISTING CURB, REMOVE AND REPLACE ENTIRE STONE OF CURB AND GUTTER.
2. THE CITY DOES NOT ACCEPT RESPONSIBILITY FOR MAINTENANCE FOR ANY DRAIN LINES INSTALLED BY OR FOR PRIVATE PROPERTY OWNERS.

CONSTRUCTION NOTES

A. D.I. OR SCH.40 P.V.C. PIPE DRAINLINE FROM PROPERTY. 4" NOMINAL DIAMETER (MAX.) FOR 8" CURB HEIGHTS. 2" NOMINAL DIAMETER (MAX.) FOR 6" CURB HEIGHTS.

B. 2- NO. 3 BARS, 2'-4" LONG, PLACED AS SHOWN.

C. COLD JOINT.

D. DISTANCE FROM CENTERLINE OF DRAIN TO NEAREST JOINT, VARIABLE WITH 16" MIN.

E. SLOPE ¼" PER FT. WITHIN R.O.W.

F. DRAIN PIPE SHALL NOT PROTRUDE BEYOND CURB FACE.

G. JOINT NEAREST TO DRAIN TO BE AN EXPANSION JOINT.

REVISIONS	CITY OF ALBUQUERQUE
	DRAINAGE
	DRAIN LINE THROUGH CURB
	DWG. 2235 JUNE 2019

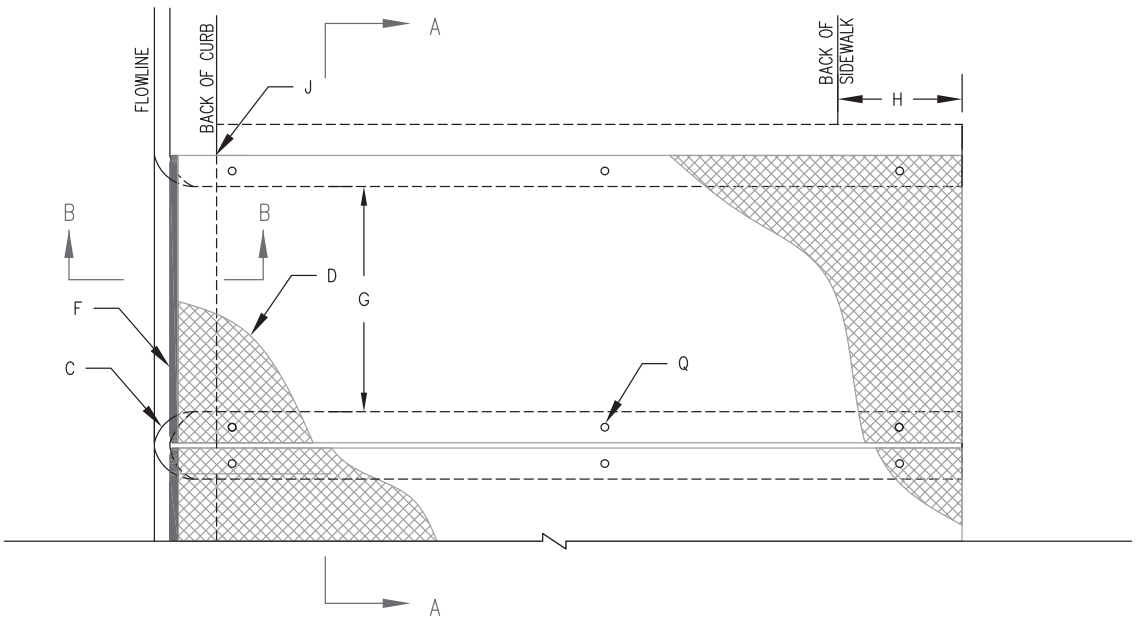

PLAN
SINGLE OR MULTIPLE CULVERT

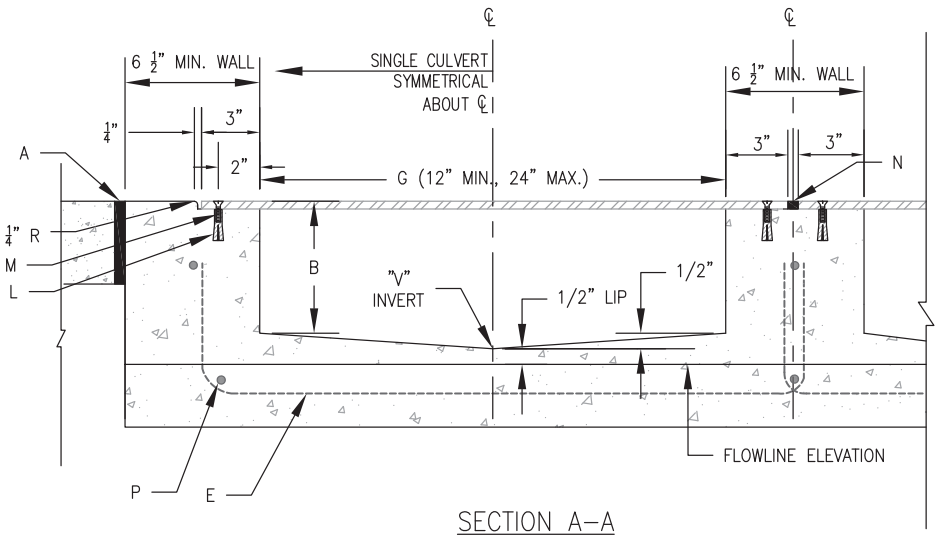

SECTION A–A
SINGLE OR MULTIPLE CULVERT

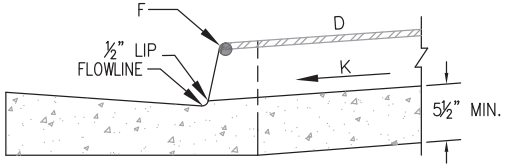

SECTION B–B
SINGLE OR MULTIPLE CULVERT

GENERAL NOTES

1. PLACING OF DRAIN THRU EXISTING SIDEWALK AND CURB & GUTTER REQUIRES THAT THE ENTIRE SIDEWALK AND CURB AND GUTTER STONES BE REMOVED AND REPLACED AS DETAILED HEREIN.
2. THE CULVERT SHALL BE POURED MONOLITHICALLY WITH NEW GUTTER.
3. THE INVERT SHALL BE TROWELED TO PRODUCE A HARD POLISHED SURFACE OF MAXIMUM DENSITY AND SMOOTHNESS. INVERT SHALL BE V–SHAPED TO WITHIN 3" OF OUTLET, THEN WARPED PARALLEL TO FLOWLINE AT THE OUTLET, UNLESS OTHERWISE SHOWN.
4. LENGTH OF EACH PLATE SHALL BE SUCH THAT THE WEIGHT WILL NOT EXCEED 300 LBS. CLEAN SURFACE OF PLATE AND PAINT WITH ONE SHOP COAT RED OXIDE AND TWO FINISH COATS ALUMINUM PAINT (AASHTO M 69).
5. THE CITY WILL NOT ASSUME RESPONSIBILITY FOR MAINTENANCE OF ANY SIDEWALK CULVERT INSTALLED BY OR FOR PRIVATE PROPERTY OWNERS.
6. CULVERT MUST BE PERPENDICULAR TO THE CURB.

CONSTRUCTION NOTES

A. INSTALL ½" EXPANSION JOINT.

B. 7" DEPTH WHEN USED IN CONJUNCTION WITH 8" CURB; 5" DEPTH WHEN USED WITH 6" CURB.

C. 3" RADIUS (TYPICAL).

D. ⅜" CHECKERED STEEL PLATE (PAINT PER NOTE 4, ABOVE).

E. NO. 3 REBAR ⌴, SPACE AT 18" O.C. MAXIMUM, 1½" MINIMUM FROM FACE OF CONCRETE. STAGGER FOR MULTIPLE CULVERTS.

F. WELD ¾" STEEL ROD TO PLATE, FULL LENGTH OF PLATE; GRIND ENDS FLUSH TO THE FACE OF CURB.

G. DRAIN WIDTH PER PLAN (12" MINIMUM, 24" MAXIMUM).

H. EXTEND CULVERT AND STEEL PLATE 1–FOOT BEYOND BACK OF SIDEWALK, UNLESS RESTRICTED BY PROPERTY LINE.

J. IF SIDEWALK IS NOT AT BACK OF CURB, EXTEND CULVERT AND STEEL PLATE TO FACE OF CURB.

K. SLOPE ¼" PER FOOT (MINIMUM).

L. FOR SECURING PLATE USE POWERS® 3/8–16 CARBON STEEL FLANGED DROPIN ANCHOR OR APPROVED EQUAL. INSTALL USING SETTING TOOL AND MANUFACTURER'S INSTRUCTIONS AT MAX 24" O.C. A MINIMUM OF 2 PER SIDE AND WITHIN 6'" OF EACH END.

M. 3/8–16X1" COUNTERSUNK, STAINLESS STEEL, MACHINE SCREW. COVER HEAD WITH 2–PART EPOXY.

N. FILL VOID BETWEEN PLATES WITH NP–1 SEALANT OR CITY APPROVED EQUIVALENT.

P. NO. 3 REBAR, CONTINUOUS.

Q. HOLE DIAMETER AT BOTTOM OF COUNTERSUNK HOLE OF STEEL PLATE TO BE ½" DIAMETER.

REVISIONS	CITY OF ALBUQUERQUE
	DRAINAGE SIDEWALK CULVERT PLAN, AND SECTIONS A–A AND B–B DWG. 2236 JUNE 2019

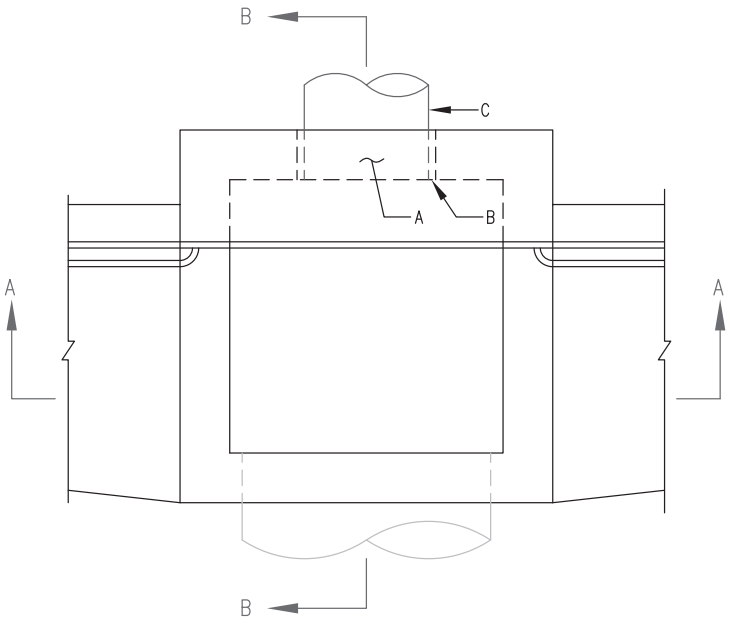

PLAN

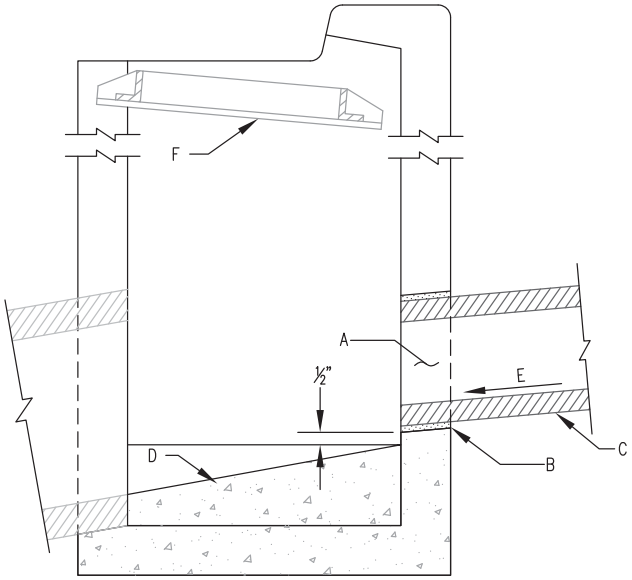

SECTION B–B

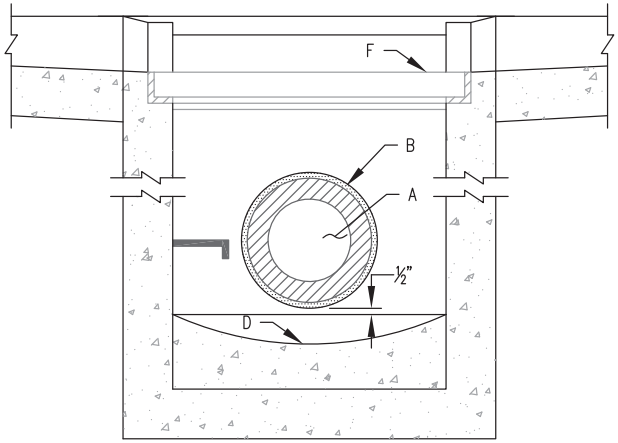

SECTION A–A

GENERAL NOTES

1. THE CITY DOES NOT ACCEPT RESPONSIBILITY FOR MAINTENANCE FOR ANY DRAIN LINES INSTALLED BY OR FOR PRIVATE PROPERTY OWNERS.
2. FOR DOUBLE "C" OR "D" STORM INLETS THE PRIVATE DRAIN LINE CONNECTION MUST BE ALIGNED WITH THE LONGITUDINAL CENTER OF EITHER GRATE FRAME.

CONSTRUCTION NOTES

A. CORE DRILL INTO BACK OF EXISTING INLET WITH INVERT OF DRILLED OPENING ½" ABOVE EXISTING CONCRETE FILL. IF NOT CORE–DRILLED, A CONCRETE COLLAR MAY BE REQUIRED.

B. GROUT OPENING WITH NONSHRINK, NONMETALLIC GROUT.

C. NEW DRAIN LINE TO BE RCP, HPPP, HDPE, OR DUCTILE IRON PIPE. DRAIN SIZE TO BE AT LEAST ONE SIZE SMALLER THAN OUTLET PIPE WITH A MAXIMUM SIZE OF 12".

D. EXISTING CONCRETE FILL.

E. SLOPE ¼" PER FOOT MIN. WITHIN R.O.W.

F. FRAME & GRATE.

REVISIONS	CITY OF ALBUQUERQUE
	DRAINAGE DRAIN LINE CONNECTION TO EXISTING STORM INLET DWG. 2237 JUNE 2019

HP STORM TRENCH INSTALLATION DETAIL

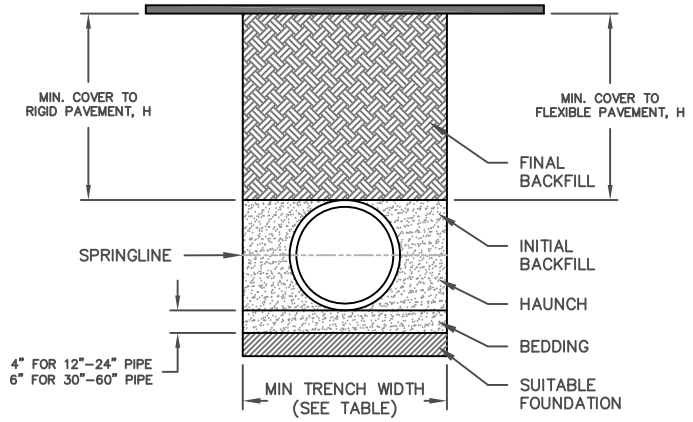

NOTES:

1. ALL PIPE SYSTEMS SHALL BE INSTALLED IN ACCORDANCE WITH ASTM D2321, "STANDARD PRACTICE FOR UNDERGROUND INSTALLATION OF THERMOPLASTIC PIPE FOR SEWERS AND OTHER GRAVITY FLOW APPLICATIONS", LATEST ADDITION, WITH THE EXCEPTION THAT THE INITIAL BACKFILL MAY EXTEND TO THE CROWN OF THE PIPE. SOIL CLASSIFICATIONS ARE PER THE LATEST VERSION OF ASTM D2321. CLASS IVB MATERIALS (MH, CH) AS DEFINED IN PREVIOUS VERSIONS OF ASTM D2321 ARE NOT APPROPRIATE BACKFILL MATERIALS.

2. MEASURES SHOULD BE TAKEN TO PREVENT MIGRATION OF NATIVE FINES INTO BACKFILL MATERIAL, WHEN REQUIRED.

3. FOUNDATION: WHERE THE TRENCH BOTTOM IS UNSTABLE, THE CONTRACTOR SHALL EXCAVATE TO A DEPTH REQUIRED BY THE ENGINEER AND REPLACE WITH SUITABLE MATERIAL AS SPECIFIED BY THE ENGINEER. AS AN ALTERNATIVE AND AT THE DISCRETION OF THE DESIGN ENGINEER, THE TRENCH BOTTOM MAY BE STABILIZED USING A GEOTEXTILE MATERIAL.

4. BEDDING: SUITABLE MATERIAL SHALL BE CLASS I, II, OR III. THE CONTRACTOR SHALL PROVIDE DOCUMENTATION FOR MATERIAL SPECIFICATION TO ENGINEER. COMPACTION SHALL BE 90% OF MAXIMUM DENSITY PER ASTM D1557 OR AS SHOWN ON THE PLANS. UNLESS OTHERWISE NOTED BY THE ENGINEER, MINIMUM BEDDING THICKNESS SHALL BE 4" (100mm) FOR 12"-24" (300mm-600mm) DIAMETER PIPE; 6" (150mm) FOR 30"-60" (750mm-900mm) DIAMETER PIPE. THE MIDDLE 1/3 BENEATH THE PIPE INVERT SHALL BE LOOSELY PLACED.

5. INITIAL BACKFILL: SUITABLE MATERIAL SHALL BE CLASS I, II, OR III IN THE PIPE ZONE EXTENDING TO THE CROWN OF THE PIPE. THE CONTRACTOR SHALL PROVIDE DOCUMENTATION FOR MATERIAL SPECIFICATION TO ENGINEER. MATERIAL SHALL BE INSTALLED AS REQUIRED IN ASTM D2321, LATEST EDITION. FOR TRAFFIC APPLICATIONS; CLASS I, II, OR III MATERIAL SHALL BE COMPACTED TO A DENSITY OF NOT LESS THAN 90% OF MAXIMUM DENSITY PER ASTM D1557. CLASS IV MATERIALS AS DEFINED IN ASTM D2321 ARE NOT APPROPRIATE BACKFILL MATERIALS.

6. MINIMUM COVER: MINIMUM COVER, H, IN NON-TRAFFIC APPLICATIONS (GRASS OR LANDSCAPE AREAS) IS 12" (300mm) FROM THE TOP OF PIPE TO GROUND SURFACE. ADDITIONAL COVER MAY BE REQUIRED TO PREVENT FLOTATION. FOR TRAFFIC APPLICATIONS; CLASS I OR II MATERIAL COMPACTED TO 90% SPD AND CLASS III COMPACTED TO 95% SPD IS REQUIRED. FOR TRAFFIC APPLICATIONS, MINIMUM COVER, H, IS 12" (300mm) UP TO 48" (1200mm) DIAMETER PIPE AND 24" (600mm) OF COVER FOR 60" (1500mm) DIAMETER PIPE, MEASURED FROM TOP OF PIPE TO BOTTOM OF FLEXIBLE PAVEMENT OR TO BOTTOM OF RIGID PAVEMENT.

7. FOR ADDITIONAL INFORMATION SEE TECHNICAL NOTE 2.04.

TABLE 1, RECOMMENDED MINIMUM TRENCH WIDTHS

PIPE DIAM.	MIN. TRENCH WIDTH
12" (300mm)	30" (762mm)
15" (375mm)	34" (864mm)
18" (450mm)	39" (991mm)
24" (600mm)	48" (1219mm)
30" (750mm)	56" (1422mm)
36" (900mm)	64" (1626mm)
42" (1050mm)	72" (1829mm)
48" (1200mm)	80" (2032mm)
60" (1500mm)	96" (2438mm)

TABLE 2, MINIMUM RECOMMENDED COVER BASED ON VEHICLE LOADING CONDITIONS

	SURFACE LIVE LOADING CONDITION	
PIPE DIAM.	H–25	HEAVY CONSTRUCTION (75T AXLE LOAD) *
12" – 48" (300mm – 1200mm)	12" (305mm)	48" (1219mm)
60" (1500mm)	24" (610mm)	60" (1524mm)

* VEHICLES IN EXCESS OF 75T MAY REQUIRE ADDITIONAL COVER

TABLE 3, MAXIMUM COVER FOR HP STORM PIPE, ft

	CLASS I	CLASS II	CLASS III
PIPE DIA	COMPACTED	90%	90%
12" (300mm)	41 (12.5m)	21 (6.4m)	16 (4.9m)
15" (375mm)	42 (12.8m)	21 (6.4m)	16 (4.9m)
18" (450mm)	44 (13.4m)	21 (6.4m)	17 (5.2m)
24" (600mm)	37 (11.3m)	18 (5.5m)	14 (4.3m)
30" (750mm)	39 (11.9m)	19 (5.8m)	15 (4.6m)
36" (900mm)	28 (8.5m)	14 (4.3m)	11 (3.4m)
42" (1050mm)	30 (9.1m)	14 (4.3m)	11 (3.4m)
48" (1200mm)	29 (8.8m)	14 (4.3m)	10 (3.0m)
60" (1500mm)	29 (8.8m)	14 (4.3m)	10 (3.0m)

FILL HEIGHT TABLE GENERATED USING AASHTO SECTION 12, LOAD RESISTANCE FACTOR DESIGN (LRFD) PROCEDURE WITH THE FOLLOWING ASSUMPTIONS:
NO HYDROSTATIC PRESSURE
UNIT WEIGHT OF SOIL (γ_s) = 120 PCF

REVISIONS	CITY OF ALBUQUERQUE
	DRAINAGE
	HP PP STORM TRENCH INSTALLATION
	DWG. 2240 MAY 2020

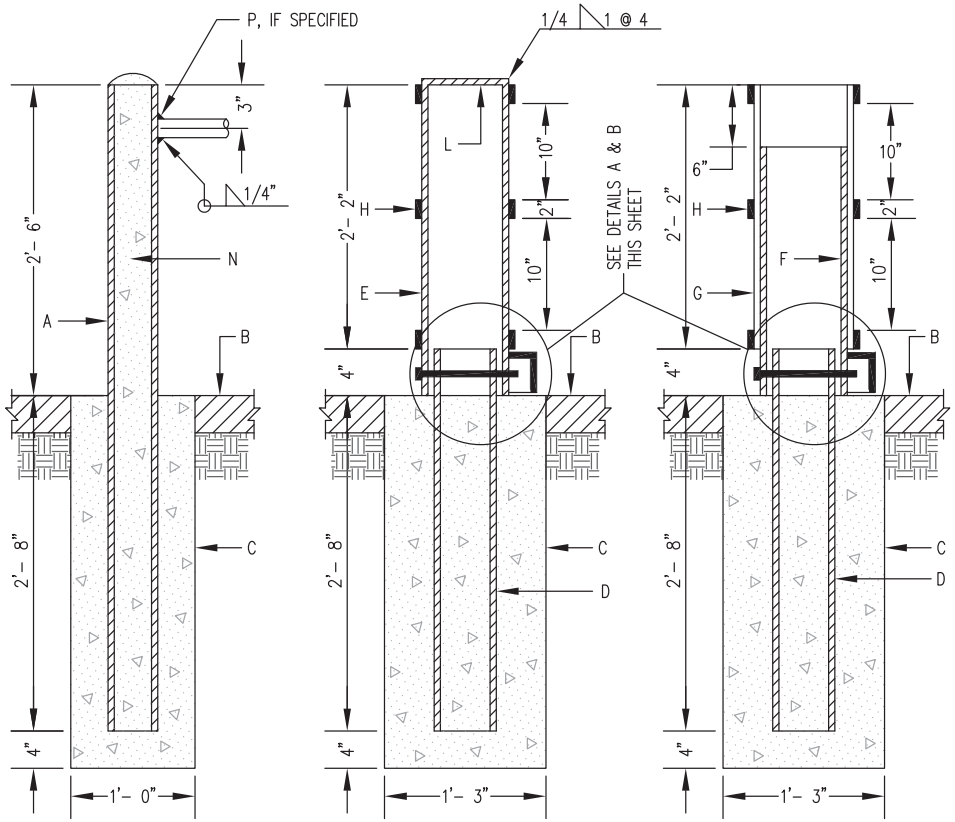

STATIONARY POST

REMOVABLE POST

REMOVABLE POST WITH RUBBER SLEEVE

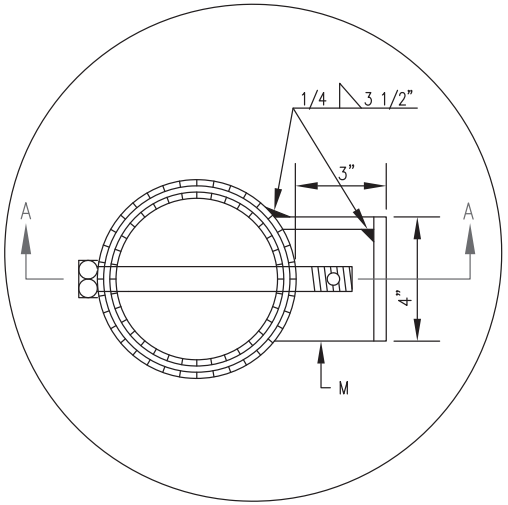

DETAIL A
PLAN

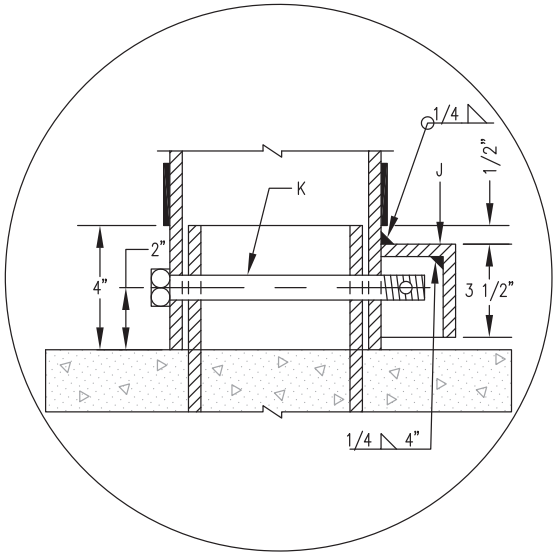

DETAIL B
SECTION A–A

GENERAL NOTES

1. FOR SLEEVE, USE GATES NO. 37 W WATER HOSE, DISCHARGE HOSE OR EQUIVALENT. I.D. 6.625" O.D. 7.29", 6 PLY WITH BLACK NEOPRENE COVER.
2. WELDS ARE TO BE GROUND SMOOTH.
3. EXPOSED STEEL AND SLEEVE TO BE PAINTED WITH AN OIL BASE ALKYD PRIMER AND AN OIL BASE ALKYD ENAMEL TOP COAT. COLOR TO BE BRIGHT YELLOW.
4. PLACEMENT OF POSTS SHOULD BE WELL AWAY FROM TRAFFIC ON MAJOR ROADWAYS & PREFERABLY AT THE R.O.W. LINE. TRAFFIC ENGINEERING SHOULD BE CONSULTED ON LOCATION WHEN NEAR TRAFFIC.

CONSTRUCTION NOTES

A. 4" NOMINAL DIA. SCHEDULE 40 GALV. STEEL PIPE, 5'–2" TO BE FILLED W/CONC. PAINT PIPE BRIGHT YELLOW ABOVE FINISHED GRADE.

B. PAVEMENT OR FINISHED GRADE.

C. CONC. COLLAR, 3000 PSI AT 28 DAYS, W/SMOOTH OR BROOM FINISH WHERE PAVEMENT IS ADJACENT.

D. 5" NOMINAL DIA. SCHEDULE 40 GALV. STEEL PIPE, 3'–0" TO BE FILLED W/CONC. TO LEVEL SHOWN.

E. 6" NOMINAL DIA. SCHEDULE 40 GALV. STEEL PIPE, 2'–8". PAINT PIPE BRIGHT YELLOW (REMOVABLE).

F. 6" NOMINAL DIA. SCHEDULE 40 GALV. STEEL PIPE, 2'–0" (REMOVABLE).

G. SLEEVE, 2'–2". PAINT BRIGHT YELLOW, SEE NOTE NO. 1 THIS SHEET.

H. 2" WIDE REFLECTIVE TAPE, AS APPROVED BY ENGINEER, LOCATE AROUND PIPE AS SHOWN.

J. 1/4" THICK STEEL SAFETY GUARD BOX. OPEN ON ONE SIDE & BOTTOM. WELD ALL SEAMS.

K. 3/4" X 8" GALV. HEX. BOLT W/ 3/8" DIA. HOLE FOR PADLOCK. (PADLOCK FURNISHED BY CITY).

L. 1/4" X 6 5/8" DIA. GALV. STEEL PLATE COVER, WELDED TO PIPE.

M. ALIGN WITH TRAFFIC FLOW IN EASEMENTS OR BIKEPATH TO AVOID TRIPPING HAZARDS WITH BOX.

N. PIPES ARE NOT TO BE FILLED W/CONC. WHEN PIPES ARE LOCATED WITHIN 15' OF STREET FLOWLINE. USE WELDED STEEL CAP INSTEAD.

P. WHERE CONNECTING BOLLARDS ARE SPECIFIED, WELD 1 1/4" NOM., SCH. 40 PIPE BETWEEN BOLLARDS.

REVISIONS	CITY OF ALBUQUERQUE
	DRAINAGE STATIONARY AND REMOVABLE POST DETAILS DWG. 2250 JUNE 2019

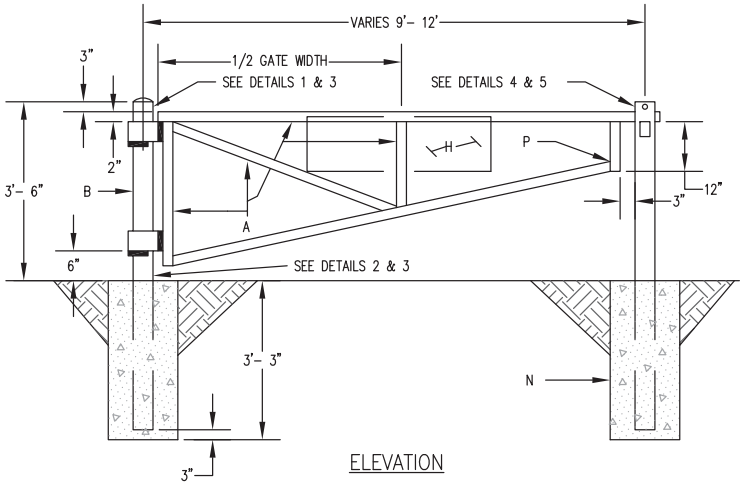

ELEVATION

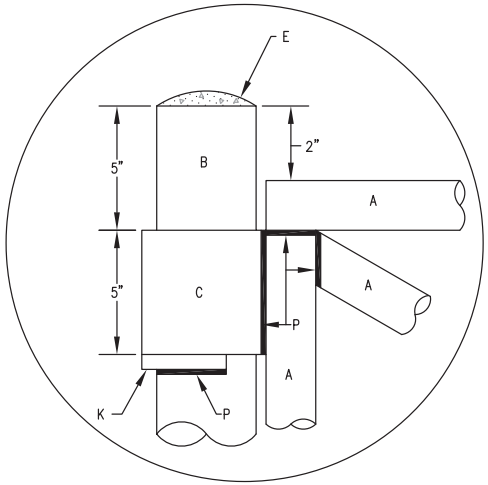

DETAIL 1

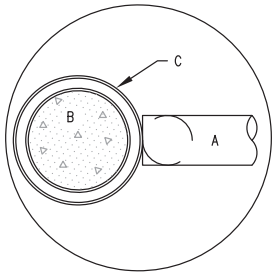

DETAIL 3

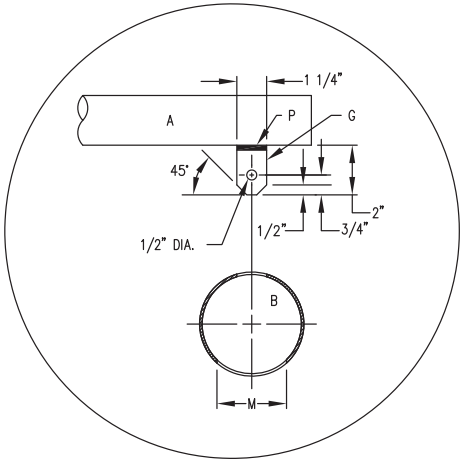

DETAIL 5

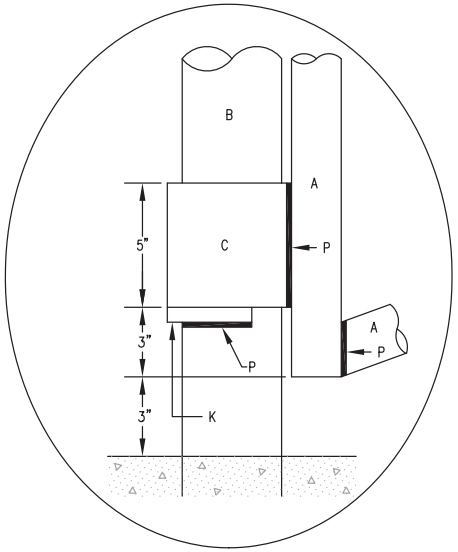

DETAIL 2

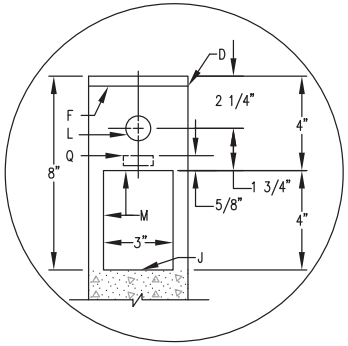

DETAIL 4

GENERAL NOTES

1. ALL WELDED AND CUT AREAS TO BE CLEANED THOROUGHLY WITH A WIRE BRUSH AND OR SAND BLAST AND REGALVANIZED.
2. REGALVANIZING SHALL BE WITH SHERWIN WILLIAMS ZINC CLAD 7 PRIMER OR EQUAL.

CONSTRUCTION NOTES

A. 2" NOMINAL DIA. GALV. PIPE, MIN. WEIGHT PER FOOT 3.65 LBS.

B. 4" DIA. BLACK STEEL PIPE, MIN. 10.79 LBS./FT., CONC. FILLED, PAINT W/2 COATS ALUM. PAINT.

C. 5" DIA. BLACK STEEL PIPE, MIN. 14.62 LBS./FT., PAINT W/2 COATS ALUM. PAINT.

D. 1/4" BUTT WELD ALL AROUND.

E. CONCRETE ROUNDED AT TOP OF POST.

F. 3/8" X 4 1/4" DIA. STEEL PLATE.

G. 3/8" STEEL PLATE FLANGE.

H. REFLECTIVE SIGN STATING, AUTHORIZED VEHICLES ONLY, WILL BE PROVIDED AND INSTALLED BY CITY.

J. STOP CONC. IN PIPE AT THIS POINT.

K. 1/2" SQ. STEEL BAR FOR HINGE SUPPORT. POSITION BAR TO ALLOW UNRESTRICTED GATE ROTATION THROUGH ENTIRE SWING OF GATE OPENING.

L. 1" DIA. FINGER HOLE.

M. MAKE A 3" X 4" CUT IN PIPE.

N. 3,000 PSI AIR ENTRAINED FLY ASH CONC.

P. WELD ALL 2" PIPE & FIXTURE CONNECTIONS WITH 3/8" FILLET ALL AROUND.

Q. 1 1/2" X 5/8" SLOT FOR STEEL PLATE FLANGE.

REVISIONS	CITY OF ALBUQUERQUE
	DRAINAGE
	PIPE GATE DETAIL
	DWG. 2251 JUNE 2019

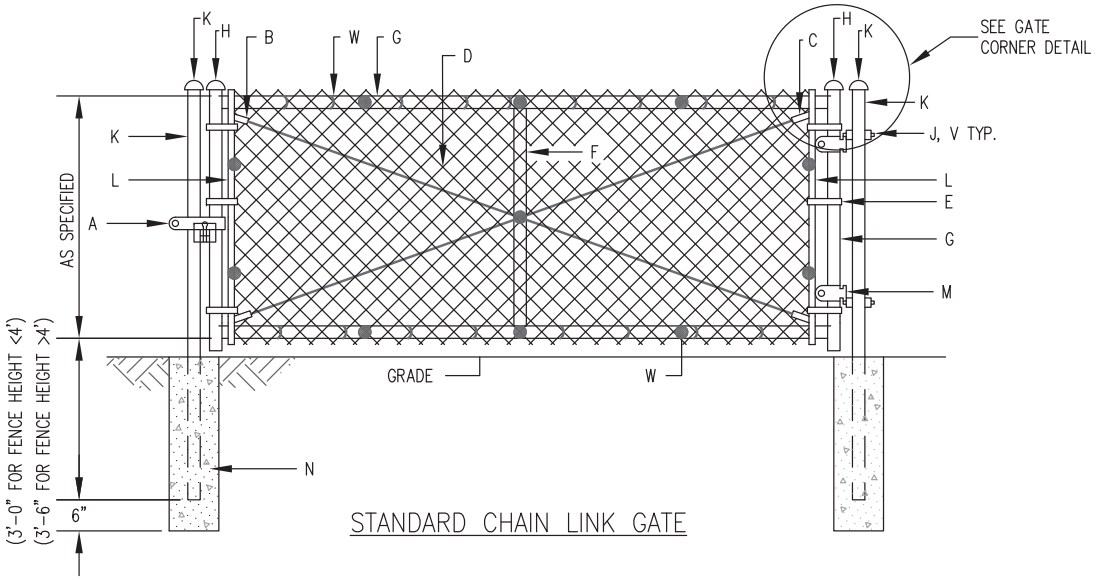

STANDARD CHAIN LINK GATE

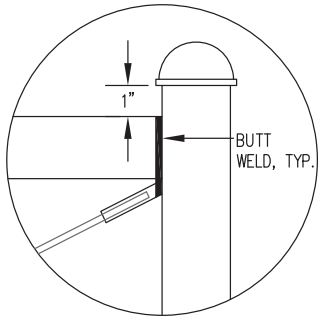

GATE CORNER DETAIL

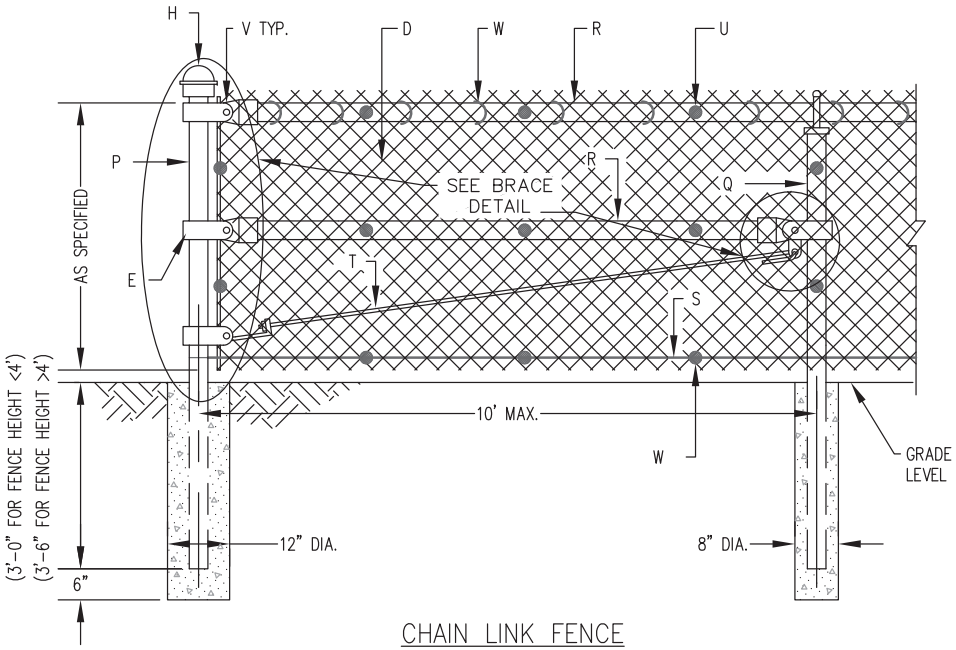

CHAIN LINK FENCE

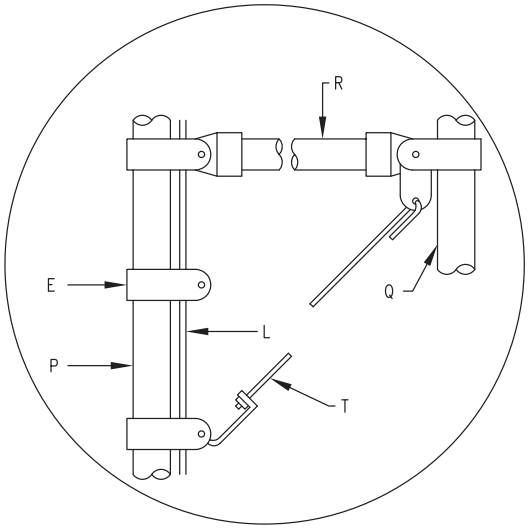

BRACE DETAIL

GENERAL NOTES

1. GATE TO BE USED AS SPECIFIED ON CONSTRUCTION DRAWINGS FOR DRAINAGE EASEMENT BARRICADE, SEE DWG. 2251 OR DWG. 2253.
2. SINGLE LEAF GATES WILL BE USED ON OPENINGS OF 12' OR LESS. FOR MORE THAN 12', DOUBLE LEAF GATES SHALL BE USED, WITH A CENTER LOCK POST INSERTED IN A PIPE SLEEVE IN CENTER OF OPENING.
3. DIMENSIONS ABOVE OR BELOW GRADE LEVEL WILL BE ON CONSTRUCTION DRAWINGS. IF NONE ARE NOTED, MESH IS FLUSH WITH GRADE LEVEL.
4. ALL METAL ITEMS, INCLUDING PIPE, SHALL BE GALV. STEEL. ALL PIPE SHALL BE NOMINAL SIZE, SCH. 40.

CONSTRUCTION NOTES

A. GATE LATCH WITH VANDAL PROOF SHIELD & PADLOCK. PADLOCK TO BE FURNISHED BY THE CITY.

B. (2) 3/8" TRUSS RODS, WELDED AT CORNERS.

C. (2) 3/8" THREADED TRUSS RODS AND BRACKET ATTACHMENT.

D. 2" NO. 9 GAUGE CHAIN LINK GALV. WIRE FABRIC.

E. STEEL TENSION BANDS AT 18" OR LESS O.C.

F. BRACE, 1 1/4" DIA., WELDED TO FRAME.

G. GATE FRAME, 2" DIA. (2.375 O.D.) WELDED.

H. MALLEABLE ACORN CAP. J. 4" J-BOLT, THREADED.

K. 3 1/2" GATE POST (4" O.D.) WITH WELDED STEEL CAP.

L. TENSION BAR 1/4" X 3/4".

M. GATE CLAMP.

N. 12" DIA. HOLES, FILLED WITH PORTLAND CEMENT CONC.

P. CORNER POST, 2 1/2" DIA. (2.875 O.D.).

Q. LINE POST, 2" DIA. (2.375 O.D.).

R. TOP AND BRACE RAILS, 1 1/4" DIA. (1.660 O.D.).

S. WIRE REINFORCEMENT, 9 GAUGE, INSTALL 3" ABOVE BOTTOM OF FABRIC.

T. TRUSS ROD, 3/8" DIA.

U. FABRIC SHALL BE TACK WELDED TWO PLACES TO EACH TENSION BAR AND THREE PLACES TO ALL TOP AND BRACE RAILS BETWEEN POSTS.

V. ALL NUTS, BOLTS, AND OTHER CONNECTIONS SHALL BE TACK WELDED.

W. WIRE TIES, 9 GA. GALV. STEEL AT 18" O.C.

REVISIONS	CITY OF ALBUQUERQUE
	DRAINAGE STANDARD CHAIN LINK GATE AND FENCE DETAIL DWG. 2252 JUNE 2019

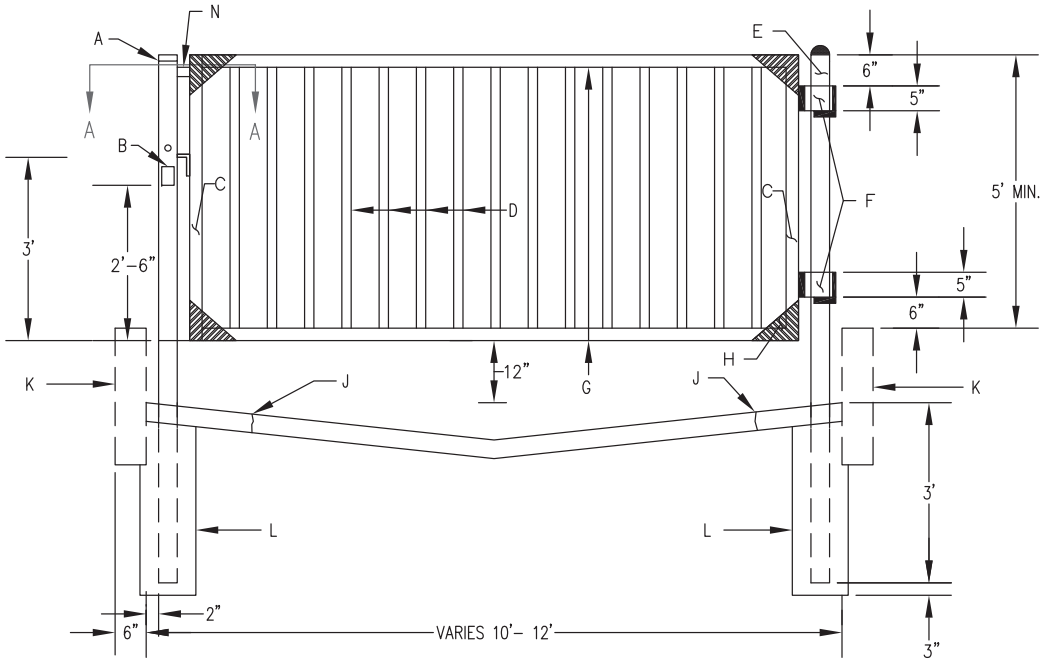

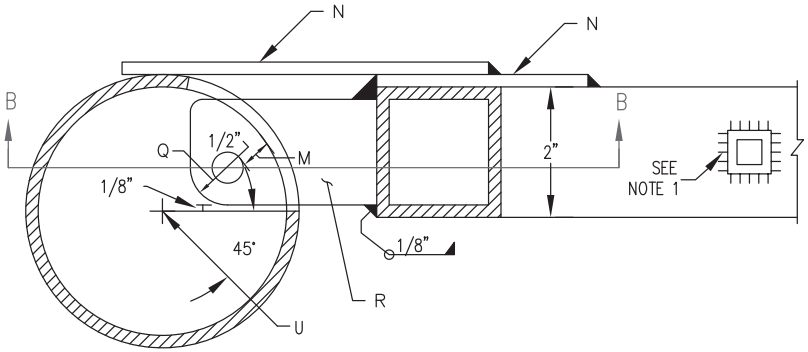

SECTION A–A

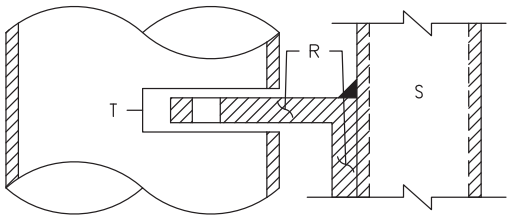

SECTION B–B

GENERAL NOTES

1. WELDS TO BE CONTINUOUS ALL AROUND, 3/32" FILLET, TYPICAL FOR GATE TUBES AND GUSSETS.
2. REMOVE SLAG AND BURRS AFTER FABRICATION.
3. CITY TO FURNISH PADLOCK.
4. FINISH: AS SPECIFIED BY THE PLANS. IF NO FINISH SPECIFIED, PAINT WITH ONE SHOP COAT OF ZINC RICH PRIMER AND TWO COATS OF ALUMINUM PAINT. (AASHTO M–69)

CONSTRUCTION NOTES

A. 4" STEEL POST W/ WELDED CAP ON TOP, FILL W/CONC. TO BOTTOM OF LOCK POCKET.

B. LOCK POCKET & GATE LATCH PER. DETAIL THIS DWG.

C. 2" X 2" ▱ STEEL TUBING X 1/8" WALL THICKNESS, VERTICAL FRAME, W/1/8" PLATE. CAP WELDED TO TOP.

D. 3/4" X 3/4" ▱ STEEL TUBING X 1/16" WALL THICKNESS @ 6" O.C. MAX.

E. 4" SCHEDULE 40 STEEL POST, CONC. FILLED.

F. SLEEVE HINGES PER. STD. DETAIL DWG. 2251.

G. 2" X 2" / STEEL TUBING X 1/8" WALL THICKNESS FOR HORIZONTAL.

H. 6" X 6" X 1/8" GUSSET PLATE. ◣, 4 PLACES.

J. SAWCUT 1" MIN.

K. CONCRETE CHANNEL PER. STD. DETAIL DWG. 2261.

L. 16" DIA. CONCRETE FINISH TOP TO MATCH CHANNEL SURFACE.

M. DRILL HOLE IN FIELD TO PROVIDE 1/8" MAX. STOP.

N. 1/8" STEEL STOP PLATE.

P. 1/8" STEEL GUSSET PLATE.

Q. 3/4" RADIUS.

R. 3" X 3" X 3/8" ANGLE – 1 5/8" LONG.

S. 2" ▱ TUBING.

T. 5/8" SLOT, ± 75° OF POST CIRCUMFERENCE.

U. ℄ OF 1"ø FINGER HOLE, ℄ 1" ABOVE LOCK SLOT & ℄ OF 3" WIDE X 4" HIGH ▱ ACCESS HOLE & LOCK POCKET TOP OF HOLE 1" BELOW LOCK SLOT, T.

REVISIONS	CITY OF ALBUQUERQUE
	DRAINAGE
	SQUARE TUBE GATE DETAIL
	DWG. 2253 JUNE 2019

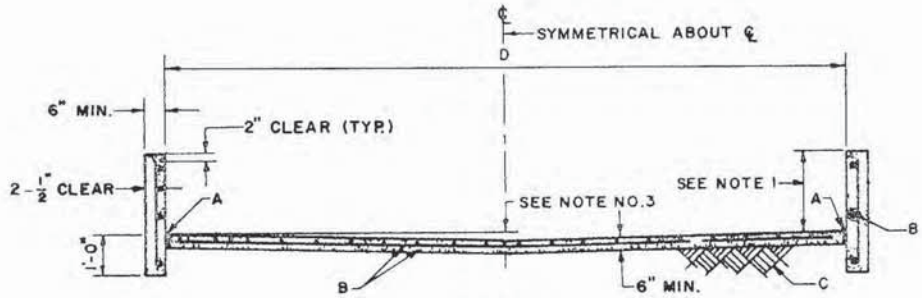

TYPE A

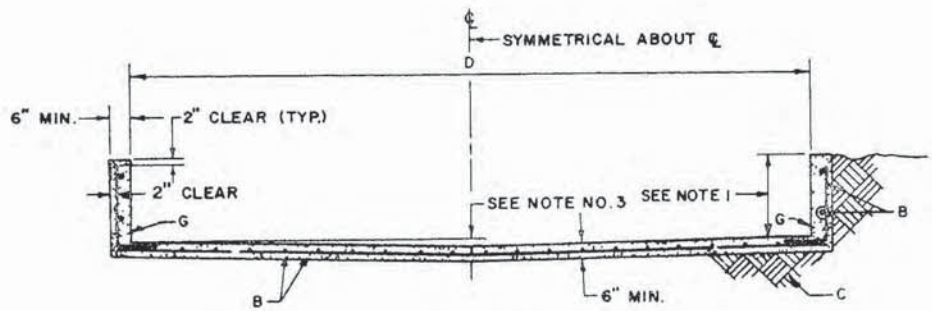

TYPE B

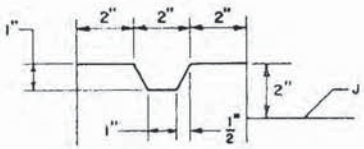

KEYWAY DETAIL

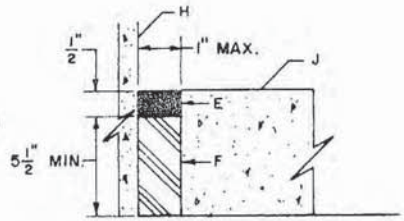

EXPANSION JOINT DETAIL

GENERAL NOTES:

1. CHANNEL DEPTHS EXCEEDING 2'-0" WILL REQUIRE SEPARATE DESIGN FOR FLOOR AND WALLS.
2. TYPE B LINING WILL BE USED ONLY WHERE NO UTILITIES ARE LOCATED OR PROPOSED.
3. UP TO 16'-0" WIDTH USE 4" INVERTED CROWN. 16'-0" WIDTH AND OVER USE 6" INVERTED CROWN.
4. WARNING: THESE WALLS ARE NOT DESIGNED TO SUPPORT THE ADDITION OF GARDEN OR RETAINING TYPE OF WALLS. A SEPARATE DESIGN MUST BE SUBMITTED FOR THE ENGINEER'S APPROVAL IN SUCH INSTALLATIONS.
5. THE OUTSIDE OF DRAINAGE WALLS SHALL NOT EXTEND BEYOND EASEMENT LINES OR RIGHT-OF-WAY LINES.
6. UNLESS OTHERWISE DETAILED ON PLANS, ISOLATE UPSTREAM AND DOWNSTREAM ENDS OF LINING FROM OTHER STRUCTURES AND FACILITIES USING THE EXPANSION JOINT DETAIL, THIS SHEET.
7. 6" CONC. BLOCK WITH CORES FILLED WITH CONC. AND NO. 4 REBARS INSERTED INTO CORES AT 1'-6" O.C., MAY BE SUBSTITUTED FOR FORMED CONC. WALLS.

CONTRUCTION NOTES

A. EXPANSION JOINT, SEE DETAIL BELOW.

B. NO.4 REBARS AT 6" O.C. LONG. AND 12" O.C. TRANSVERSE.

C. 6" COMPACTED SOIL 95% PER ASTM D 1557.

D. WIDTH OF CHANNEL.

E. URETHANE PRIMER AND SEALANT.

F. POLYETHYLENE FOAM FILLER TO DEPTH OF SLAB.

G. KEYED CONSTRUCTION JOINT, SEE DETAIL BELOW.

H. WALL SURFACE.

J. CHANNEL SURFACE.

CITY OF ALBUQUERQUE

REVISIONS
12-21-92

DRAINAGE

TYPICAL LINING FOR DRAINAGE EASEMENTS

DWG. 2260

AUG. 1986

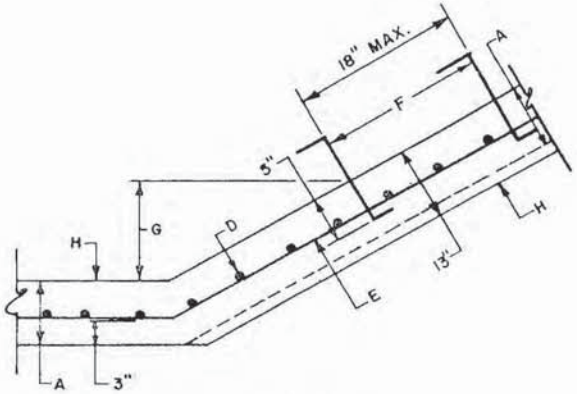

CHANNEL STEP
PLACEMENT DETAILS

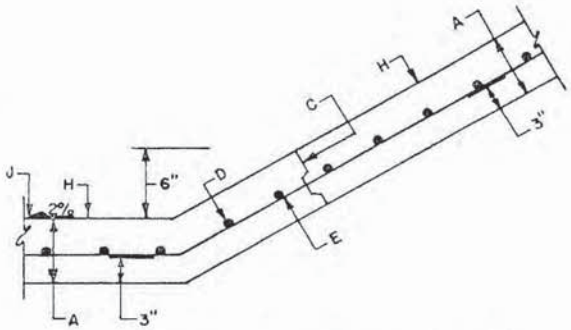

CHANNEL INVERT-SIDE SLOPE
INTERSECTION

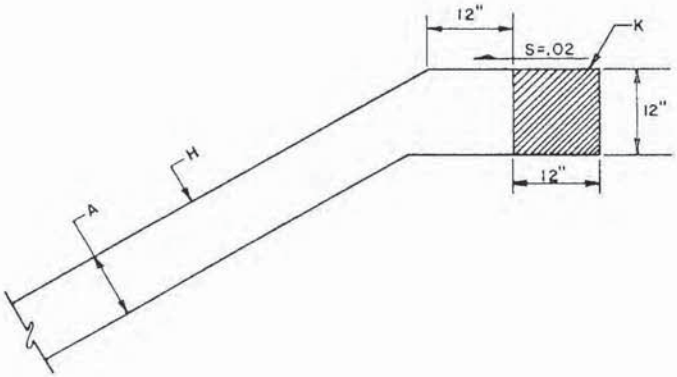

THICKENED EDGE

GENERAL NOTES:

1. CHANNEL DETAILS TO BE DEVELOPED AND SHOWN ON THE CONSTRUCTION DWG'S FOR EACH SPECIFIC PROJECT DETAILS SHOWN HERE ARE MEANT TO CONVEY SOME OF THE SAME CHANNEL CRITERIA THAT IS CONTAINED IN CHAPTER 22, SECTION 8, PART D OF THE DEVELOPMENT PROCESS MANUAL.
2. NEW CHANNEL CONSTRUCTION SHALL INCLUDE STATIONING PAINTED ON CHANNEL AS SHOWN ON PLANS (200 FT. STATIONS TYPICAL).
3. WATER LEVEL DEPTH MARKS SHALL BE PAINTED AND LABELED ON BOTH SIDES OF CHANNEL IMMEDIATELY UPSTREAM AND DOWNSTREAM OF ANY CHANNEL STRUCTURE AS SHOWN ON PLANS.

CONSTRUCTION NOTES:

A. THICKNESS AS SPECIFIED ON CONSTRUCTION DWG'S FOR CHANNEL BOTTOM AND SIDE SLOPE.
C. EXPANSION, CONTRACTION AND CONSTRUCTION JOINTS SHALL COMPLY WITH SECTION 602 AND AS APPROVED BY THE ENGINEER. WHERE SAW CUT JOINTS ARE PROVIDED, A JOINT SEALANT SHALL BE REQUIRED.
D. LONGITUDINAL STEEL AREA .005 TIMES CONCRETE AREA.
E. TRANSVERSE STEEL AREA .0025 TIMES CONCRETE AREA.
F. ACCESS AND RESCUE STEPS SHALL BE INSTALLED ON BOTH SIDES OF THE CHANNEL IMMEDIATELY BEFORE AND AFTER THE INLET AND OUTLET TRANSITION OF CHANNEL STRUCTURE. SEE DWG. 2229 FOR STEP DETAILS.
G. BOTTOM STEP APPROXIMATELY 18" VERTICAL ABOVE INVERT.
H. NEW CONCRETE CHANNEL LINING.
J. CHANNEL LINING SHALL BE PLACED WITH A CENTERLINE INVERT. THE CHANNEL BOTTOM SHALL HAVE A TRANSVERSE SLOPE OF 2% FROM EACH SIDE TO THE INVERT AT CENTERLINE.
K. NATIVE MATERIAL (OR AS SPECIFIED) COMPACTED TO 95% PER ASTM D-1557.

REVISIONS	CITY OF ALBUQUERQUE
6/15/92	DRAINAGE CHANNEL DETAILS
	DWG. 2261 AUG. 1986

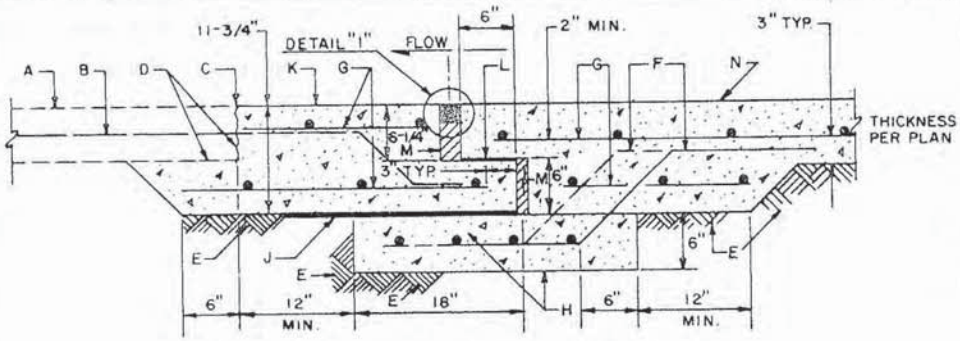

CROSS SECTION DETAIL OF REPLACEMENT OR NEW EXPANSION JOINT WITH CONCRETE SLEEPER

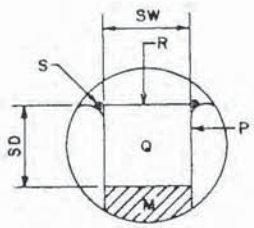

DETAIL "I"

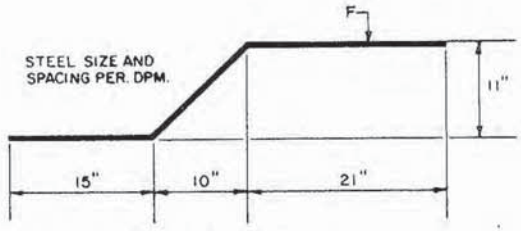

"Z" BAR DETAIL

FILLER AND SEALANT DIMENSION TABLE (INCHES)

FILLER SIZE (M) BOTTOM (MB)		TOP (MT)		SEALANT BLOCK-OUT (SW)	(SD)	SEALANT ORDER SIZE	
WIDTH	DEPTH	WIDTH	DEPTH	WIDTH	DEPTH	WIDTH	DEPTH
1"	6"	2"	4 1/4"	2"	2"	2 1/2"	2"
2"	6"	3"	3 3/4"	3"	2 1/2"	3 3/4"	2 1/2"
3"	6"	4"	2 3/4"	4"	3 1/2"	5"	3 1/2"
4"	6"	5"	2 1/4"	5"	4"	6 1/4"	4"

GENERAL NOTES:

1. EXPANSION JOINT WITH SLEEPER SHALL BE USED IN NEW AND REHABILITATION CONSTRUCTION. AS SPECIFIED BY THE ENGINEER. JOINT MATERIALS SHALL BE INSTALLED ACCORDING TO MANUFACTURER'S RECOMMENDATIONS.
2. FOR PARTIAL JOINT CONSTRUCTION. A 15 LB. FELT BOND BREAKER, THE WIDTH OF THE STEP JOINT SHALL BE APPLIED BETWEEN EXISTING AND REPLACEMENT JOINT MATERIALS.
3. REHABILITATION MAY BE REQUIRED AT EITHER OR BOTH SIDES OF STEP JOINT.
4. FOR NEW CONSTRUCTION DISREGARD REHABILITATION NOTES; A COLD JOINT IS ALLOWED A MINIMUM OF 5' ON EITHER SIDE OF JOINT CENTERLINE WITH REBAR CONTINUOUS THROUGH COLD JOINT. SANDBLAST COLD JOINTS BEFORE PLACING NEW CONC.
5. AS SOON AS THE STEP JOINT IS COMPLETE, THE EXPOSED ENDS OF THE STEP JOINT AT CHANNEL EDGE SHALL BE COVERED WITH A PROTECTIVE SHEET OF 16 GA GALV. STEEL WITH 1/2" CRIMPED EDGES ANCHOR AT TWO CORNERS ON ONE SIDE OF THE JOINT, FLUSH TO THE TOP OF THE JOINT, AND EXTEND AT LEAST 3" PAST THE SEALANT, FILLERS AND LOWER BEARING PLATE.

CONSTRUCTION NOTES:

A. EXISTING CONCRETE CHANNEL LINING OR STRUCTURE.

B. EXISTING REINFORCING STEEL TO REMAIN.

C. SAW CUT EXISTING CONCRETE LINING AS MARKED IN FIELD, 1" TO 1 1/2" DEEP. BREAK OUT AND REMOVE EXISTING LINING AND JOINT. CAREFULLY PRESERVE REINFORCING STEEL 18" FROM CUT.

D. SANDBLAST EDGE OF EXISTING CONCRETE JUST PRIOR TO PLACING NEW CONCRETE.

E. COMPACT SUBGRADE TO MINIMUM 90% PER ASTM D 1557.

F. ALTERNATE Z-BAR LOCATIONS IN TWO POSITIONS SHOWN. SEE "Z" BAR DETAIL THIS SHEET, SECURELY TIE ALL CONNECTIONS AND SUPPORT SLEEPER MAT WITH CHAIRS.

G. STEEL SIZE AND SPACING PER D.P.M., LONGITUDINAL STEEL AREA ____.005 TIMES CONCRETE AREA; TRANSVERSE STEEL AREA ___.0025 TIMES CONCRETE AREA. TIE REINFORCEMENT MATS TOGETHER IN DOWNSTREAM SLAB WITH 6" STANDARD "Z-CHAIRS", NUMBER 4 BAR AT 12" CENTER-CENTER.

H. FORM AND POUR CONCRETE SLEEPER, STEEL TROWEL BEARING SURFACE SIDE ONLY. RECOMPACT ADJACENT SOIL.

J. LOW DENSITY POLYETHYLENE BEARING PLATE, 1/4" X 24", PLACED FLAT ON SAME GRADE AS CHANNEL. CARE SHALL BE TAKEN NOT TO LOCK EDGE OF PLATE WITH CONCRETE FILLED HOLES OR FLASHING. COMPACT SOIL TO TOP PLANE OF PLATE.

K. FORM AND POUR DOWN STREAM CONCRETE SECTION AS SHOWN WITH ALUMINUM FLOAT AND DRY BROOM FINISH. APPLY STEEL TROWEL FINISH TO BEARING PLATE SURFACE ONLY. BEARING PLATE SURFACE MUST BE PARALLEL TO BEARING PLATE SURFACE ON SLEEPER. FORMS MUST REMAIN IN PLACE AT LEAST 12 HOURS FOLLOWING POUR.

L. PLACE 1/4" X 6' LOW DENSITY POLYETHYLENE BEARING PLATE AS SHOWN BETWEEN THE TWO FILLER SECTIONS.

M. PLACE POLYETHYLENE FOAM FILLERS AS SHOWN, PLASTAZONE OR APPROVED EQUAL. DO NOT ANCHOR WITH NAILS OR BONDING AGENT. KEEP IN PLACE WITH FRESH CONCRETE WHEN POURING UPSTREAM SECTION. DO NOT ALLOW FRESH CONCRETE BETWEEN FILLER AND PREVIOUS CONCRETE. SEE TABLE FOR BOTTOM AND TOP FILLER SIZES.

N. POUR UPSTREAM SECTION WITH FLY ASH CONCRETE. SEE DWG. 2261 FOR CHANNEL LINING THICKNESS. VERTICAL SIDES OF FORM USED TO BLOCK OUT SPACE FOR SEALANT SHALL BE SMOOTH, CLEAN MATERIAL TO AVOID CAUSING CONTAMINATION AND FOR EASE OF REMOVAL. CONCRETE SHALL BE CURED TO MINIMUM 80% OF DESIGN STRENGTH BEFORE INSTALLING SEALANT.

P. PREPARE VERTICAL NOSING FOR BONDER BY SANDBLASTING. BLOW ALL SAND OUT OF THE JOINT BEFORE APPLYING BONDER.

Q. IMMEDIATELY INSTALL ETHYLENE VINYL ACETATE FOAM SEALANT, EVA SEAL OR APPROVED EQUAL, AS SHOWN. DIMENSION OF FOAM SEALANT BEFORE INSTALLATION SHALL BE PER DIMENSION TABLE. FOAM SEALANT MUST BE COMPRESSED INTO JOINT. IMMEDIATELY REMOVE ALL BONDER FROM TOP SURFACE OF SEALANT.

R. SAND SURFACE OF SEALANT FLUSH TO TOP OF CONCRETE. APPLY ULTRA VIOLET PROOFING, 2 COATS, FLEXCOAT 19 OR APPROVED EQUAL.

S. BONDER BEAD IN GROOVE BETWEEN TOOLED RADIUS AND SEALANT IS TO REMAIN.

REVISIONS
9/21/92

CITY OF ALBUQUERQUE

DRAINAGE

CHANNEL EXPANSION JOINT WITH SLEEPER

DWG. 2265

AUG. 1986

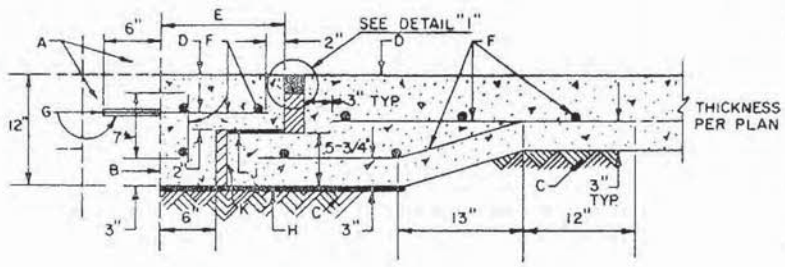

EXPANSION JOINT TIE TO EXISTING CONCRETE WALL

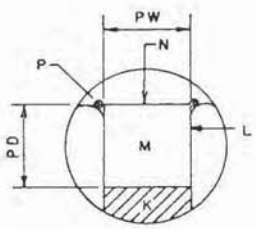

DETAIL "I"

FILLER AND SEALANT DIMENSION TABLE (INCHES)

FILLER SIZE (K) BOTTOM (KB)		TOP (KT)		SEALANT BLOCK-OUT (PW)	(PD)	SEALANT ORDER SIZE	
WIDTH	DEPTH	WIDTH	DEPTH	WIDTH	DEPTH	WIDTH	DEPTH
1"	6"	2"	4 1/4"	2"	2"	2 1/2"	2"
2"	6"	3"	3 3/4"	3"	2 1/2"	3 3/4"	2 1/2"
3"	6"	4"	2 3/4"	4"	3 1/2"	5"	3 1/2"
4"	6"	5"	2 1/4"	5"	4"	6 1/4"	4"

GENERAL NOTES:

1. THIS JOINT SHALL BE SPECIFIED FOR CONNECTING NEW OR REHABILITATED CHANNEL LINING TO EXISTING CONCRETE STRUCTURES AS SPECIFIED BY THE ENGINEER. A SIMILAR JOINT MAY BE DETAILED FOR JOINTS AT NEW STRUCTURES. JOINT MATERIALS SHALL BE INSTALLED ACCORDING TO THE MANUFACTURER'S RECOMMENDATIONS.
2. BREAK OUT AND REMOVE EXISTING LINING AS REQUIRED BY THE ENGINEER.
3. FOR NEW LINING CONNECTION TO EXISTING STRUCTURE, DISREGARD REHABILITATION NOTES.

CONSTRUCTION NOTES:

A. EXISTING CONCRETE CHANNEL LINING OR STRUCTURE.

B. SANDBLAST EDGE OF EXISTING CONCRETE JUST PRIOR TO PLACING NEW CONCRETE.

C. COMPACT SUBGRADE TO MINIMUM 90% PER ASTM D 1557.

D. NEW CONCRETE CHANNEL LINING. POUR LOWER STEP SECTION FIRST. STEEL TROWEL FINISH ON STEP PARALLEL TO BOTTOM PLATE. DRY BROOM FINISH ON EXPOSED SURFACE.

E. 12" + BOTTOM JOINT WIDTH K. TOTAL ANCHORED BAR LENGTH = E + 3".

F. STEEL SIZE AND SPACING PER D.P.M., LONGITUDINAL STEEL AREA ____.005 TIMES CONCRETE AREA; TRANSVERSE STEEL AREA ___.0025 TIMES CONCRETE AREA.

G. CORE DRILL 1 1/2" HOLES AT 12' O.C. 6" DEEP INTO EXISTING STRUCTURE WITH CONTINUOUS WATER LUBRICATION AND COOLANT. NOTE: DO NOT USE IMPACT DRILL. BOND REBAR INTO PLACE WITH SOLID 2 PART, QUICK SETTING EPOXY.

H. INSTALL LOW DENSITY POLYETHYLENE BEARING PLATE 1/4" X (24" COMPACT ADJACENT EARTH TO TOP PLANE OF PLATE TO PREVENT LOCKING WITH CONCRETE FILLED DEPRESSIONS).

J. PLACE 1/4" X 6" LOW DENSITY POLYETHYLENE BEARING PLATE AS SHOWN BETWEEN THE TWO FILLER SECTIONS.

K. PLACE POLYETHYLENE FOAM FILLERS AS SHOWN, PLASTAZONE OR APPROVED EQUAL. DO NOT ANCHOR WITH NAILS OR BONDING AGENT. KEEP IN PLACE WITH FRESH CONCRETE WHEN PLACING SECOND SECTION. DO NOT ALLOW FRESH CONCRETE BETWEEN FILLER AND PREVIOUSLY CONCRETE. SEE TABLE FOR BOTTOM AND TOP FILLER SIZES.

L. PREPARE VERTICAL NOSING FOR BONDER BY SANDBLASTING. BLOW ALL SAND OUT OF THE JOINT BEFORE APPLYING BONDER.

M. IMMEDIATELY INSTALL ETHYLENE VINYL ACETATE FOAM SEALANT, EVA-SEAL OR APPROVED EQUAL, AS SHOWN. DIMENSION OF FOAM SEALANT BEFORE INSTALLATION SHALL BE PER DIMENSION TABLE. FOAM SEALANT MUST BE COMPRESSED INTO JOINT. IMMEDIATELY REMOVE ALL BONDER FROM TOP SURFACE OF SEALANT.

N. SAND SURFACE OF SEALANT FLUSH TO TOP OF CONCRETE. APPLY ULTRA VIOLET PROOFING, 2 COATS, FLEXCOAT 19 OR APPROVED EQUAL.

P. BONDER BEAD IN GROOVE BETWEEN TOOLED RADIUS AND SEALANT IS TO REMAIN.

REVISIONS	CITY OF ALBUQUERQUE DRAINAGE EXPANSION JOINT CONNECTION TO CONCRETE WALL. DWG. 2266 AUG. 1986

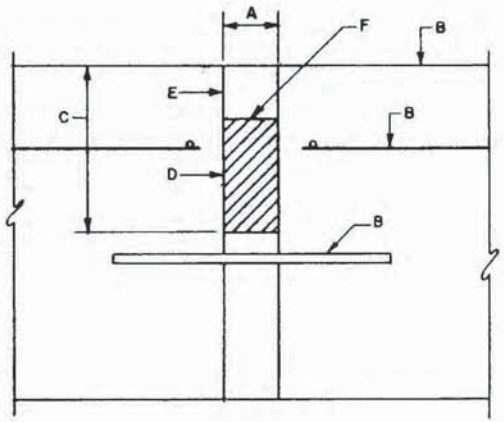

EXIST. EXPANSION JNT. REPAIR
ROUT & SEAL

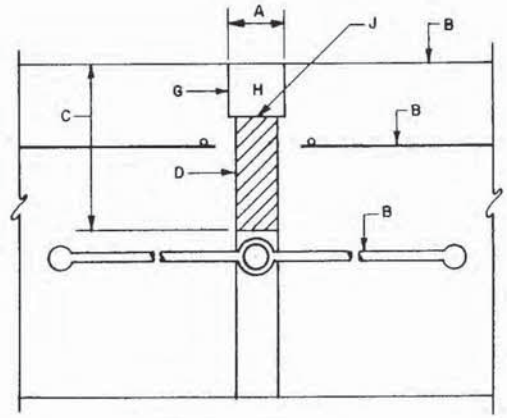

EXIST. EXPANSION JNT. REPAIR
SAW-ROUT & SEAL

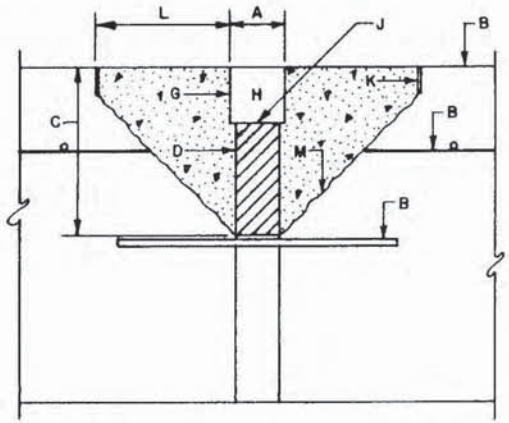

EXIST. EXPANSION JNT. REPAIR
SPALLED AREA
CHIP-SAW-ROUT & SEAL

GENERAL NOTES:

1. THESE DETAILS OF EXIST. JNT. REPAIRS ARE GUIDELINES & MIN. REQUIREMENTS FOR FAILED EXPANSION JNT. & SPALLED CHANNEL LINING REPAIRS.

CONSTRUCTION NOTES:

A. JNT. WIDTH: JNTS. IN GOOD CONDITION, OF UNIFORM WIDTH, ROUT & SEAL ONLY. JNTS. IN NEED OF REPAIR SHALL BE CUT W/A WHEEL MOUNTED, DOUBLE BLADED SAW OR TRACK MOUNTED ADJ. ARBOR SAW TO OPEN JNT. TO A 1" MIN. WIDTH. SEE SECT. 602.5.1 CITY STANDARD SPECIFICATIONS.

B. EXIST. CHANNEL LINING, REINF. STEEL, DOWELS OR WATERSTOPS TO REMAIN.

C. JNT. TO BE ROUTED OUT TO 3" MIN. DEPTH OR TO DOWEL AND/OR WATERSTOP, IF LESS THAN 3"

D. POLYETHYLENE FOAM FILLER, SECT. 107.3.3.

E. BONDING AGENT, SECT. 107.4.2.1.2.

F. PREPARATION & APPLICATION WITH TWO COMPONENT URETHANE SEALANT. JNTS. LESS THAN 1" WIDE, SEALANT DEPTH WILL EQUAL 1/2 THE WIDTH. SEE SECTS. 107.4.1.2 & 107.4.2.

G. SEE SECT. 107.4.1.2 FOR PREPARATION & APPLICATION & 107.4.1.1.2 FOR BONDING AGENT.

H. FOAM SEALANT (EVA-FOAM) SECT. 107.4.1, MATERIAL SECT. 107.4.1.1.

J. SURFACE FINISH & ULTRA-VIOLET PROOFING SECT. 107.4.1.2.3.

K. EDGES OF SPALLED AREAS SHALL BE SAWED OR CHIPPED TO 1/2" MIN. DEPTH.

L. WIDTH SHALL BE BROKEN OUT TO 4" MIN. WHETHER NEXT TO EXPANSION JNT. OR NOT.

M. SPALLED AREA TO BE PATCHED SHALL BE CHIPPED & SANDBLASTED TO SOUND, CLEAN CONC. & BONDED OR PRIMED & GROUTED PER MANUFACTURER'S RECOMMENDATIONS. SECT. 106.9.

REVISIONS	CITY OF ALBUQUERQUE DRAINAGE CHANNEL EXPANSION JOINT REPAIR DWG. 2267 AUG. 1986

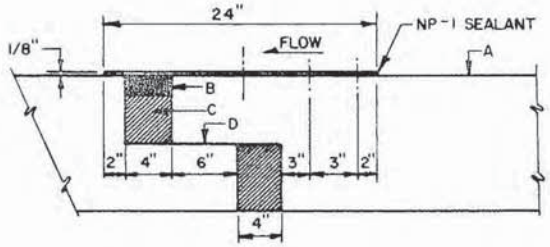

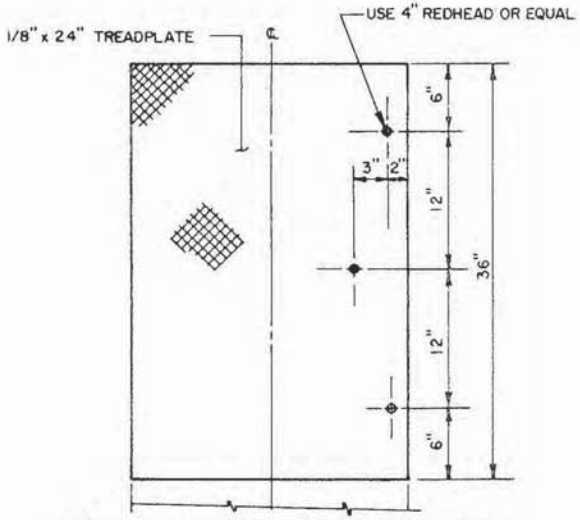

VANDAL PROTECTION PLATE DETAIL

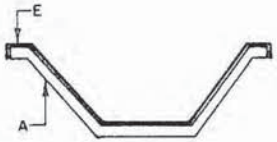

GENERAL NOTES:

1. STEP JOINT PROTECTION PLATE SHALL BE USED IN NEW AND REHABILITATION CONSTRUCTION AS SPECIFIED BY THE ENGINEER.
2. SEE CITY OF ALBUQUERQUE STANDARD DETAIL DWG. NO. 2265 FOR CHANNEL EXPANSION JOINT WITH SLEEPER.

CONSTRUCTION NOTES:

A. CONCRETE CHANNEL LINING OR STRUCTURE.
B. ETHYLENE VINYL ACETATE FOAM SEALANT, EVA SEAL, OR APPROVED EQUAL.
C. POLYETHYLENE FOAM FILLER, PLASTAZONE OR APPROVED EQUAL.
D. LOW DENSITY POLYETHYLENE BEARING PLATE.
E. 1/8" X 24" GALVANIZED STEEL TREADPLATE. PLATE SHALL EXTEND FULL WIDTH ACROSS CHANNEL AND COVER BOTH EDGES AS SHOWN.

	CITY OF ALBUQUERQUE
REVISIONS	DRAINAGE STEP JOINT PROTECTION PLATE
	DWG. 2268 AUGUST 1992

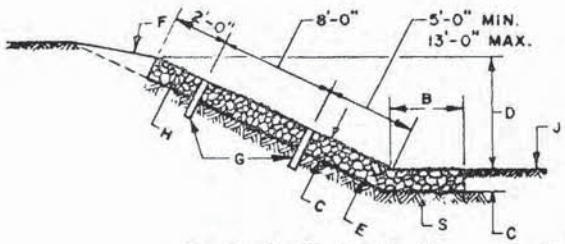

SECTION TYPE A

QUANTITIES PER LIN. FT.

SLOPE	RIPRAP CU. YDS.
$1\frac{1}{2}:1$	$\frac{C}{27}(B+1.803D+0.303C)$
$1\frac{3}{4}:1$	$\frac{C}{27}(B+2.016D+0.266C)$
2 :1	$\frac{C}{27}(B+2.236D+0.236C)$
3 :1	$\frac{C}{27}(B+3.162D+0.162C)$
4 :1	$\frac{C}{27}(B+4.123D+0.123C)$

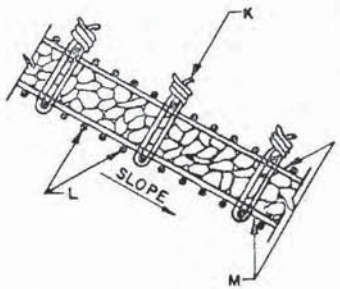

TYPICAL SECTION

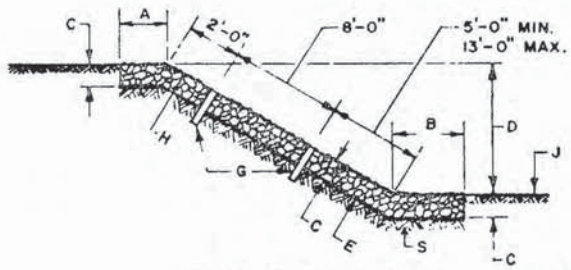

SECTION TYPE B

QUANTITIES PER LIN. FT.

SLOPE	RIPRAP CU. YDS.
1 :1	$\frac{C}{27}(A+B+1.414D)$
$1\frac{1}{2}:1$	$\frac{C}{27}(A+B+1.803D)$
$1\frac{3}{4}:1$	$\frac{C}{27}(A+B+2.016D)$
2 :1	$\frac{C}{27}(A+B+2.236D)$
3 :1	$\frac{C}{27}(A+B+3.162D)$
4 :1	$\frac{C}{27}(A+B+4.123D)$

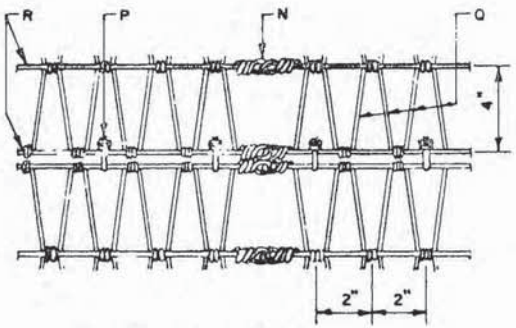

DETAIL OF WIRE FABRIC
AND NORMAL SPLICE

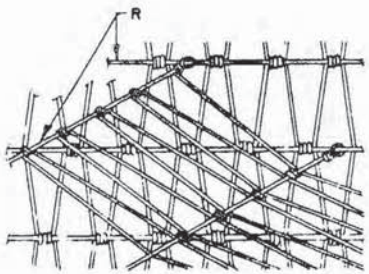

DETAIL OF SPLICE
AT SKEWED INTERSECTIONS

"V" MESH

GENERAL NOTES:

1. DETAIL FROM N.M.S.H.D. DETAIL, SERIAL BRR-001-05
2. WIRE FABRIC IS TO BE GALV. V-MESH, APPROX. WEIGHT: 48 LBS. PER 100 SQ. FT.
3. STEEL STAKES ARE CONSIDERED INCIDENTAL TO THE COMPLETION OF THE WORK & NO DIRECT MEASUREMENT OR PAYMENT WILL BE MADE THEREFOR.
4. IF LENGTH OF SLOPE IS 15' OR LESS ONLY ONE ROW OF STEEL STAKES 2' FROM THE TOP EDGE OF THE RIPRAP WILL BE REQUIRED UNLESS OTHERWISE NOTED ON PLANS.

CONSTRUCTION NOTES:

A,B,C & D DIMENSIONS TO BE SHOWN ON PLANS.

E. FILTER MATERIAL, 6" MIN. DEPTH AS SHOWN ON PLANS.

F. FILL & COMPACT AFTER PLACEMENT OF RIPRAP.

G. STEEL STAKES MAY BE RAILROAD RAILS NOT LESS THAN 30 LBS. PER FT., 4" O.D. STANDARD STRENGTH GALV. ST. PIPE OR 4 X 4 X $\frac{3}{8}$ STEEL ANGLES. STEEL STAKES SHALL BE 5' LONG AND 8' O.C. AND SHALL BE RECESSED TO A MAX. OF 3", BELOW TOP OF RIPRAP.

H. WIRE ENCLOSED RIPRAP.

J. FINISHED GROUND LINE.

K. NO. 9 GAGE GALV. WIRE TIES APPROX. 2' O.C. LONGITUDINALLY & TRANSVERSLEY.

L. MAIN WIRES TO BE PLACED PERPENDICULAR TO SLOPE.

M. WIRE FABRIC.

N. TRANSVERSE SPLICE.

P. LONGITUDINAL SPLICE, NO. 9 GALV. WIRE TIES (ONE WRAP ALTERNATE SPACES).

Q CROSS WIRES: SINGLE $12\frac{1}{2}$ GAGE WIRES SPACED AT 2" WITH NOT LESS THAN TWO TURNS AROUND MAIN WIRES.

R. MAIN WIRES: TWO NO. $12\frac{1}{2}$ GAGE STRANDED WIRES SPACED AT 4".

S SUBGRADE COMPACTED TO 90% MAX. DENSITY AS PER ASTM D 1557, 6" MIN. DEPTH.

CITY OF ALBUQUERQUE

REVISIONS

DRAINAGE

WIRE ENCLOSED RIPRAP

DWG. 2270

AUG. 1986

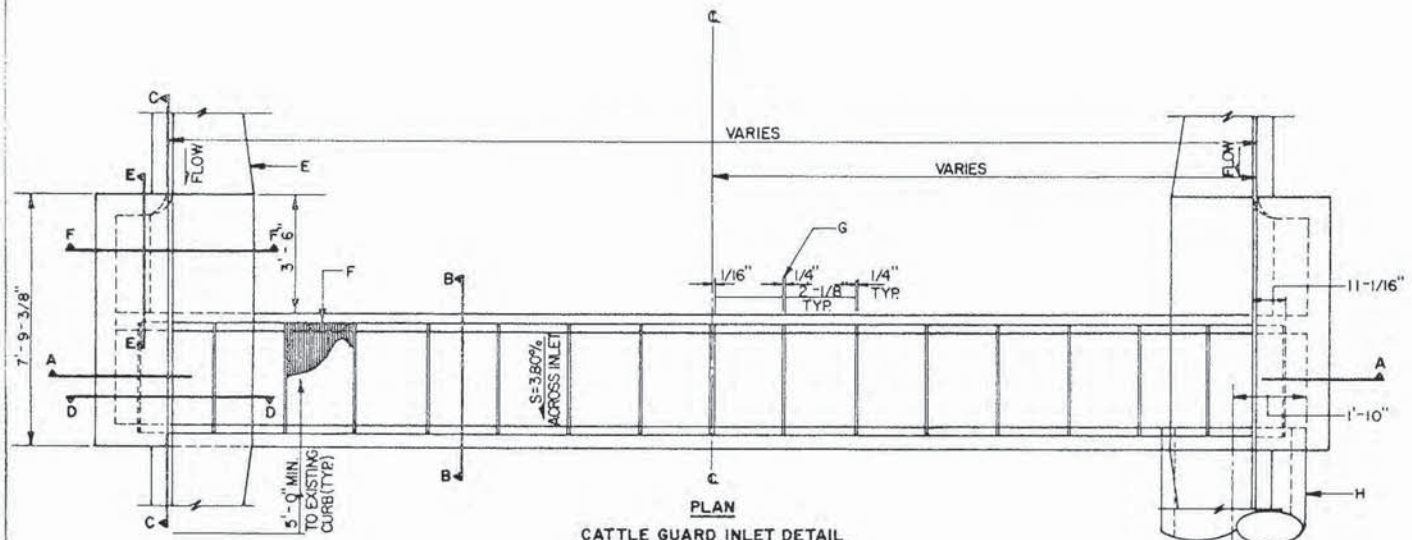

PLAN

CATTLE GUARD INLET DETAIL

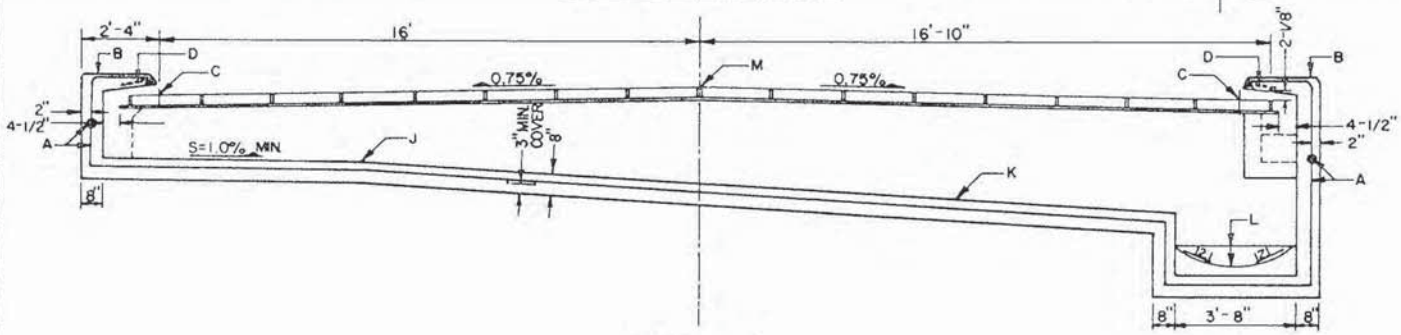

SECTION A-A

NOTE: SEE DWG. 2272 FOR SECTIONS B-B, C-C, D-D, E-E, AND F-F.

GENERAL NOTES

1. ALL EXPOSED METAL PARTS SHALL BE PAINTED PRIOR TO ASSEMBLY. WELDING, MACHINING AND DRILLING SHALL BE DONE PRIOR TO PAINTING. ALL DIMENSIONS ARE FINISH DIMENSIONS.
2. ALL PARTS SHALL BE OF STRUCTURE STEEL, GRADE 36.
3. FOR CLEANING AND PAINTING OF FRAME SEE DWG. 2215, GENERAL NOTE NO. 4.
4. FRAME MAY BE WELDED OR RIVETED.

CONSTRUCTION NOTES

A. NO. 4 BARS AT 6" O.C. EACH WAY.
B. TOP OF CURB.
C. CURB FLOWLINE.
D. ANGLE ANCHOR DETAIL, SEE DWG. 2205.
E. SEE CITY OF ALBUQUERQUE STD. DWG. 2207 FOR STORM INLET GUTTER TRANSITION.
F. GRATE PER CITY OF ALBUQUERQUE STD. DWG. 2220 (TYP.) 16 TOTAL MODIFIED WITH 1" GAP COVER PLATE PER DETAIL THIS SHEET.
G. 1/4" SPACE BETWEEN GRATER (TYP.).
H. OUTLET STORM DRAINAGE HORIZONTAL AND VERTICAL LOCATION MAY VARY PER SPECIFIC PROJECT.
J. GRADE BREAK;
K. GRADE BREAK LOCATIONS AND SLOPE MAY VARY DEPENDING ON LOCATION OF INLET.
L. CONCRETE FILL MINIMUM LONGITUDINAL SLOPE 4:1.
M. CROWN.

REVISIONS	CITY OF ALBUQUERQUE DRAINAGE CATTLE GUARD INLET DWG. 2271 APRIL 1992

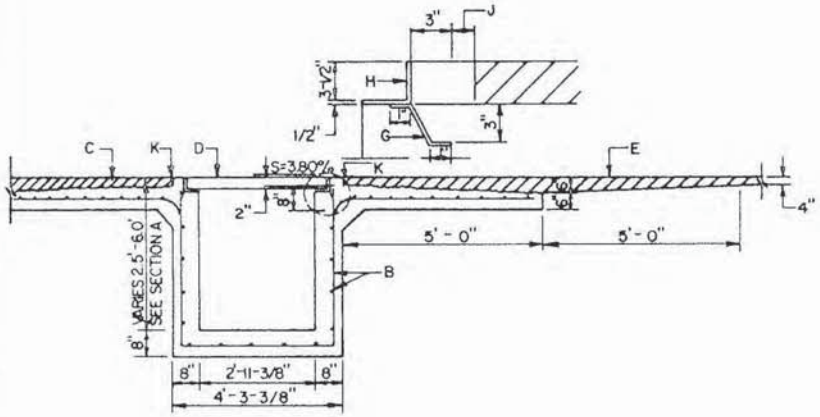

SECTION B-B

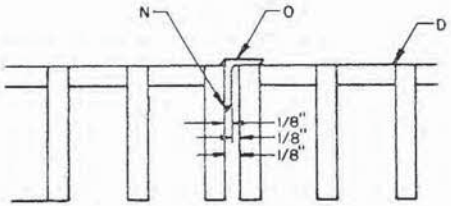

GRATE CAP COVER PLATE DETAIL

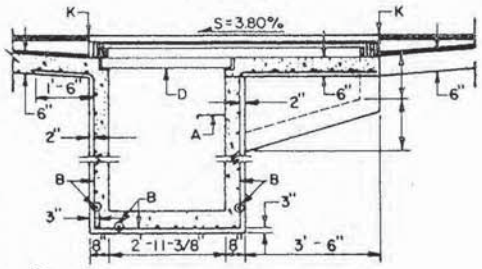

SECTION C-C

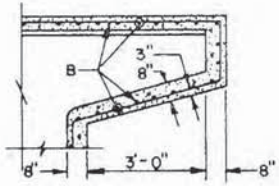

SECTION E-E

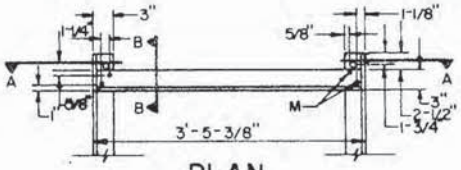

PLAN

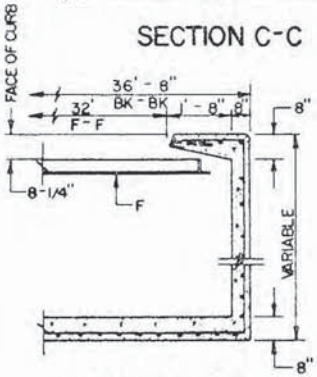

SECTION D-D

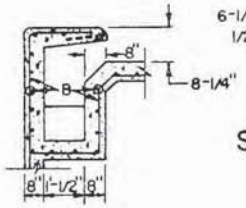

SECTION F-F

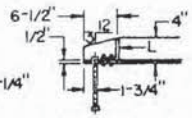

SECTION B-B

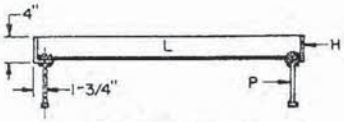

SECTION A-A

GRATE FPAME END DETAIL

NOTE:
SEE DWG. 2271 FOR ADDITIONAL CATTLE GUARD INLET DETAIL

GENERAL NOTES

1. ALL EXPOSED METAL PARTS SHALL BE PAINTED PRIOR TO ASSEMBLY. WELDING, MACHINING AND DRILLING SHALL BE DONE PRIOR TO PAINTING. ALL DIMENSIONS ARE FINISH DIMENSIONS.
2. ALL PARTS SHALL BE OF STRUCTURE STEEL, GRADE 36.
3. FOR CLEANING AND PAINTING OF FRAME SEE DWG. 2215, GENERAL NOTE NO. 4.
4. FRAME MAY BE WELDED OR RIVETED.

CONSTRUCTION NOTES

A. FOR STORM INLET DEPTHS GREATER THAN 4'. INSTALL STD. STEPS, SEE STD. DETAIL.
B. NO. 4 BARS AT 6" O.C. EACH WAY.
C. ROUGH TEXTURE CONCRETE SURFACE (TYP.)
D. GRATE.
E. THICKEN ASPHALT PAVEMENT TO 6" AT EDGE OF APRON BOTH SIDES OF INLET (TYP.)
F. GRATE FRAME.
G. 1" X 1/8" STEEL STRAP-WELD TO ANGLE 6" O.C.
H. 4" X 3" X 1/2".
J. 2" CLEARANCE.
K. SEE PLAN.
L. 3-1/2" X 3" X 3/8" X 3'-4"-3/8".
M. 2-3/8" RIVETS AT EACH CORNER, SEE GENERAL NOTE NO. 4.
N. 1/8" FILLET WELD 2" LONG AT 6" O.C. (TYP.)
O. 1/2" X 1" X 1/8" STEEL ANGLE FULL LENGTH OF GRATE ONE SIDE ONLY EACH GRATE.
P. FOUR (4) EACH 1/2" x 8" BOLTS WITH SQUARE HEADS AND NUTS. ONE BOLT AT EACH CORNER FOR ANCHORING THE FRAME INTO THE CONCRETE WALL.

CITY OF ALBUQUERQUE

REVISIONS

DRAINAGE

CATTLE GUARD INLET

DWG. 2272

APRIL 1992

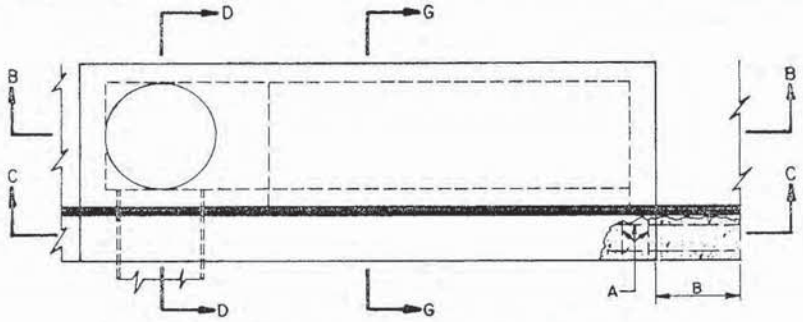

PLAN OF SPECIAL DROP INLET AT MEDIAN

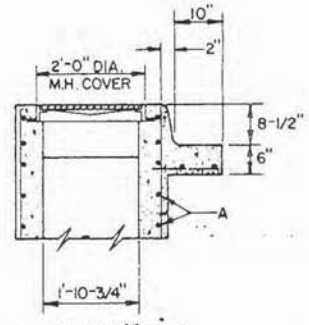

SECTION D-D

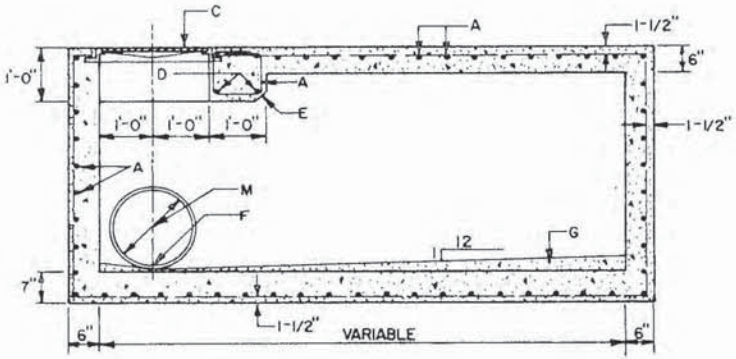

SECTION B-B

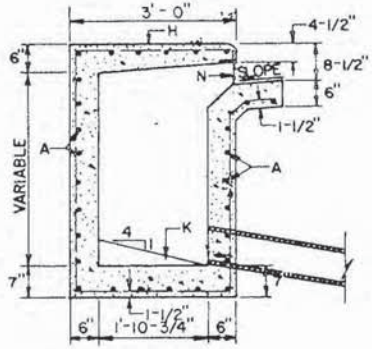

SECTION G-G

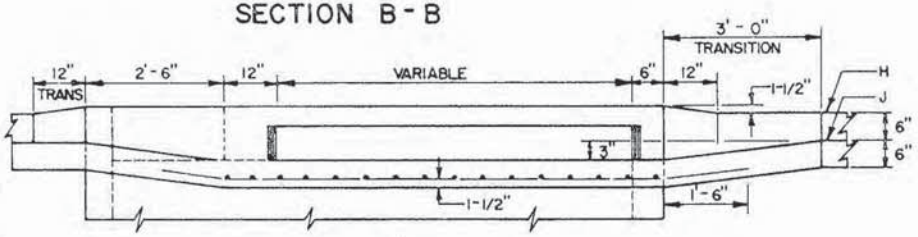

SECTION C-C

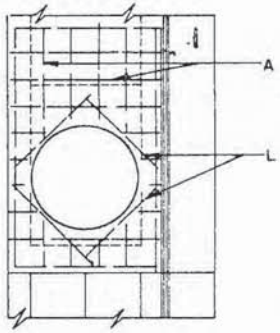

TOP MAT OF REINFORCEMENT

GENERAL NOTES

1. FOR STORM INLET GUTTER TRANSITION, SEE STD. DETAIL DWG. 2207.
2. OUTLET PIPE SIZE, PER DESIGN REQUIREMENT.

CONSTRUCTION NOTES

A. NO. 4 REBAR @ 6" O.C. EACH WAY.
B. EXTEND REBARS 1'-6" (TYP.)
C. MANHOLE FRAME AND COVER PER. CITY OF ALBUQUERQUE STD. DETAIL DWG. 2110.
D. 2 EACH, NO. 5 REBAR @ 6" O.C.
E. 2" CHAMFER.
F. INVERT PER PLAN.
G. CONCRETE FILL.
H. TOP OF MEDIAN CURB.
J. FLOWLINE.
K. CONCRETE FILL 4:1 MINIMUM SLOPE TOWARDS OUTLET AND 12:1 TRANSVERSE.
L. NO. 4 REBARS, 8 EACH.
M. OUTLET STORM DRAIN.
N. 6" MINIMUM OPENING

CITY OF ALBUQUERQUE

DRAINAGE

MEDIAN STORM INLET

DWG.2273

JUNE 1992

CHANNEL STATIONING

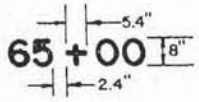

WATER DEPTH MARKS

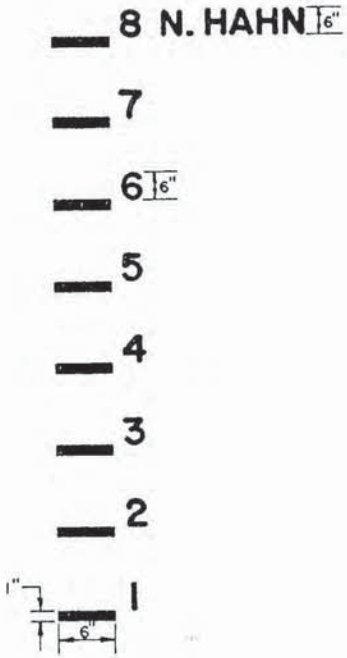

GENERAL NOTES

1. ONE INCH LINE AND NUMBERS WIDTH TO BE USED IN ALL CASES.
2. STATIONING AND WATER DEPTH MARKS WITH CHANNEL NAME TO BE PLACED 10' TO 20' ABOVE AND BELOW CROSSING STRUCTURES ON BOTH SIDES OF CHANNEL.
3. STATIONING TO BE PLACED ON BOTH SIDES OF CHANNEL EVERY 200 FEET, + OR - 1 FOOT.
4. STATIONING TO BE PLACED 6" DOWN FROM TOP OF CHANNEL.
5. WATER DEPTH MARKS TO EXTEND TO TOP OF CHANNEL WITH CHANNEL NAME PLACED TO THE RIGHT OF THE UPPER MARKED NUMBER AND 2" DOWN FROM TOP OF CHANNEL.
6. LETTERING AND NUMBERING TO BE WHITE.
7. PAINT TO BE AS SPECIFIED AND APPROVED BY ENGINEER.

CONSTRUCTION NOTES

A. TOP OF LINE TO BE AT INDICATED WATER LEVEL MEASURED FROM CHANNEL INVERT WITH BOTTOM OF NUMBER AT TOP OF LINE AS SHOWN.

CITY OF ALBUQUERQUE

REVISIONS

DRAINAGE
STATIONING AND WATER DEPTH MARKS IN CONCRETE LINED CHANN

DWG. 2274

SEPT. 1992