From:	Leder, Charles S.
To:	Tavarez, Isreal L.
Cc:	Larson, Gregory S.; Stan Allred; Auh, Peter
Subject:	Application for an Emergency Permit for a 3 MW generator for SWRP
Date:	Thursday, June 3, 2021 3:42:49 PM
Attachments:	image001.png image002.png 202106036 Emergency Permit request for 3 MW genset-signed.pdf Completed application packet.pdf

---

External

Isreal at COA-Air Quality Programs:

See attachments. Does Air Quality Programs need a paper package complete with the original, signed application form? Pls advise. Thx.

BTW, I'm guessing that Director Mast's email address is rmast@cabq.gov. Let me know if I'm right so I can send him his copy of our request

Charles S. Leder, P.E. (NM & TX)
Manager – Plant Operations Division
Albuquerque Bernalillo County Water Utility Authority
PO Box 568 | Albuquerque NM | 87103
cleder@abcwua.org
505-289-3401 (office) | 505-331-6021 (cell)
www.abcwua.org

Albuquerque Bernalillo County
Water Utility Authority

PO Box 568
Albuquerque, NM 87103
www.abcwua.org

June 3, 2021

Chair
Steven Michael Quezada
County of Bernalillo
Commissioner, District 2

Vice Chair
Klarissa J. Peña
City of Albuquerque
Councilor, District 3

Walt Benson
County of Bernalillo
Commissioner, District 4

Pat Davis
City of Albuquerque
Councilor, District 6

Trudy E. Jones
City of Albuquerque
Councilor, District 8

Timothy M. Keller
City of Albuquerque
Mayor

Charlene Pyskoty
County of Bernalillo
Commissioner, District 5

Ex-Officio Member
Pablo R. Rael
Village of Los Ranchos
Board Trustee

Executive Director
Mark S. Sanchez

Website
www.abcwua.org

Via e-mail

Ryan Mast
Director
City of Albuquerque – Environmental Health Department
P.O. Box 1293
Albuquerque, NM 87103

RE: Southside Water Reclamation Plant
Request for an Emergency Permit for a 3 MW generator

The Albuquerque Bernalillo County Water Utility Authority ("Water Authority") is requesting an Emergency Permit to install a 3 MW diesel-fueled engine generator ("generator") at its Southside Water Reclamation Plant (SWRP). The SWRP is the Water Authority's sole facility for treating wastewater generated within its service area and operates under NPDES Permit #NM0022250 issued by EPA Region 6. The expectation of EPA for its permittees is to have sufficient resiliency in their operations so that NPDES Permit requirements for treated wastewater quality will be met under all conditions except for the most extreme emergency events.

This request concerns the South Blower Building which is a critical SWRP facility that must be available 24/7/365 in order to meet effluent quality requirements listed in its NPDES Permit. This facility supplies compressed air to maintain aerobic conditions in the Nitrogen Removal Process Basins (please refer to attached process flow diagram). If there is a prolonged interruption to the blower power supply such as occurred on October 20, 2015, the SWRP will fail to meet its NPDES Permit daily limit for effluent ammonia which is 1.5 mg/L. We also experienced two "near miss" events caused by power outages on July 24, 2020 and April 30, 2021 that prevented the Water Authority from operating sufficient blowers to treat the wastewater. It should be noted that exceedances of this ammonia limit are of concern not only to EPA but also to the Pueblo of Isleta which is situated downstream and whose water quality standards for the Rio Grande are used to determine just how "clean" the Water Authority's effluent needs to be.

The Water Authority has implemented a temporary, stopgap solution to provide back-up power to the South Blower Building by renting a 2 MW trailer-mounted generator. The rented unit allows us to power some, but not all of the blowers needed to run the treatment process. Accordingly, to provide a permanent, adequate, and long-term solution for back-up power at the South Blower Building, the Water Authority is requesting an Emergency Permit to allow it to install a 3 MW generator unit at that facility. We have enclosed the following items in support of the Water Authority's request:

- Completed Application for Air Pollutant Sources in Bernalillo County
- Map showing location of Southside Water Reclamation Plant site & proposed location of 3 MW generator

- Schematic process flow diagram
- Illustrative product data sheet for proposed 3 MW generator
- Manufacturer's engine emissions data sheet
- EPA certificate of Conformity with Clean Air Act for proposed 3 MW generator
- Calculations sheet for hourly and annual emissions for both uncontrolled emissions and controlled emission scenarios

In support of this request, we are also providing the following information in accordance with NMAC 20.11.41.13.E that is not already found in the above materials:

- 20.11.41.13.E.5 – Operational and maintenance strategy
    - (a) The proposed 3 MW generator is equipped with factory-set, non-adjustable, automated controls that regulate engine performance and which are designed to maintain engine emissions at the levels published by the manufacturer. In addition, the Water Authority will be maintaining this unit in accordance with the manufacturer's published preventive maintenance procedures and maintaining records for same.

    - (b) The nature of emissions during routine start-up or shutdown of the engine have not been published by the manufacturer. Other than the automated engine controls previously described, the proposed unit does not have any air pollution control equipment.

    - (c) The Water Authority proposes to use observations of engine exhaust gas opacity as a general indicator that emissions during routine start-up or shutdown are being minimized.

- 20.11.41.13.E.10 – Other than periodic checks of engine exhaust gas opacity, the Water Authority is not planning to perform any other emission measurements for the proposed 3 MW generator.

- 20.11.41.13.E.11 – Once installed, the proposed 3 MW generator will only operate during routine readiness checks and when needed in response to power outages. During a power outage, the unit will be manually started by Water Authority staff to provide power to operate blowers located in the SWRP South Blower Building. Following restoration of the normal power supply, Water Authority staff will de-energize this unit. As described, this unit will not operate more than 200 hours per year.

The potential threat to public health, safety, and welfare in our community posed by not having a reliable power supply for the SWRP South Blower Facility can be readily avoided by granting the Water Authority an Emergency Permit that allows it to install a 3 MW generator as described. Please contact me with any questions you may have about our application package for this generator.

Respectfully yours,

Charles S. Leder, PE

cc: Isreal Tavarez, PE
Stan Allred
Peter Auh
Greg Larson, PE

City of Albuquerque – Environmental Health Department
Air Quality Program

Please mail this application to **P.O. Box 1293, Albuquerque, NM 87103**
or hand deliver between 8:00 am – 5:00 pm Monday-Friday to:
3rd Floor, Suite 3023 – One Civic Plaza NW, Albuquerque, NM 87102
(505) 768-1972 aqd@cabq.gov

Application for Air Pollutant Sources in Bernalillo County
Source Registration (20.11.40 NMAC) and Construction Permits (20.11.41 NMAC)

Submittal Date: 6/3/2021

Corporate Information ☒ **Check here and leave this section blank if information is exactly the same as Facility Information below.**

Company Name:			
Mailing Address:	City:	State:	Zip:
Company Phone:	Company Contact:		
Company Contact Title:	Phone:	E-mail:	

Stationary Source (Facility) Information: **Provide a plot plan (legal description/drawing of the facility property) with overlay sketch of facility processes, location of emission points, pollutant type, and distances to property boundaries.**

Facility Name: Southside Water Reclamation Plant			
Facility Physical Address: 4201 Second St SW	City: Albuquerque	State: NM	Zip: 87105
Facility Mailing Address (if different):	City:	State:	Zip:
Facility Contact: Charles S. Leder, PE	Title: Manager-Plant Operations Division		
Phone: 505-331-6021	E-mail: cleder@abcwua.org		
Authorized Representative Name[1]: Stan Allred	Authorized Representative Title: Chief Financial and Operations Officer		

Billing Information ☐ **Check here if same contact and mailing address as corporate** ☒ **Check here if same as facility**

Billing Company Name:			
Mailing Address:	City:	State:	Zip:
Billing Contact:	Title:		
Phone:	E-mail:		

Preparer/Consultant(s) Information ☒ **Check here and leave section blank if no Consultant used or Preparer is same as Facility Contact.**

Name:	Title:		
Mailing Address:	City:	State:	Zip:
Phone:	Email:		

1. See 20.11.41.13.E.(13) NMAC.

Application for Air Pollutant Sources in Bernalillo County
Source Registration (20.11.40 NMAC) and Construction Permits (20.11.41 NMAC)

General Operation Information (if any question does not pertain to your facility, type N/A on the line or in the box)

Permitting action being requested (please refer to the definitions in 20.11.40 NMAC or 20.11.41 NMAC):			
☒ New Permit	☐ Permit Modification Current Permit #:	☐ Technical Permit Revision Current Permit #:	☐ Administrative Permit Revision Current Permit #:
UTM Coordinates or Latitude – Longitude of Facility: UTM Zone 13; 347765 m E; 3876319 m N			
Facility Type (description of your facility operations): Publicly Owned Treatment Works (POTW) for municipal wastewater treatment			
Standard Industrial Classification (SIC Code #): 4952		North American Industry Classification System (NAICS Code #): 221320	
Is this facility currently operating in Bernalillo County? Yes		If **YES**, list date of original construction: If **NO**, list date of planned startup: circa 1962	
Is the facility permanent? Yes		If **NO**, list dates for requested temporary operation: From Through	
Is the application for a physical or operational change, expansion, or reconstruction (altering process, or adding, or replacing process or control equipment, etc.) to an existing facility? Yes			
Provide a description of the requested changes: Emergency permit for a 3 MW generator at the named facility to provide emergency power for aeration blowers during PNM power outages			
Is the facility operation: ☒ Continuous ☐ Intermittent ☐ Batch			

Estimated percent of production/operation:	Jan-Mar:	Apr-Jun:	Jul-Sep:	Oct-Dec:
Requested operating times of facility:	hours/day	days/week	weeks/month	months/year

Will there be special or seasonal operating times other than shown above? This includes monthly- or seasonally-varying hours. No	
If **YES**, please explain:	
List raw materials processed: wastewater	
List saleable item(s) produced: treated effluent, power from an on-site cogeneration facility, and compost produced from treatment process biosolids	

Regulated Emission Sources Table

(Generator-Crusher-Screen-Conveyor-Boiler-Mixer-Spray Guns-Saws-Sander-Oven-Dryer-Furnace-Incinerator-Haul Road-Storage Pile, etc.)
Match the Units listed on this Table to the same numbered line if also listed on Emissions Tables & Stack Table.

Unit Number and Description[1]		Manufacturer	Model #	Serial #	Manufacture Date	Installation Date	Modification Date[2]	Process Rate or Capacity (Hp, kW, Btu, ft³, lbs, tons, yd³, etc.)[3]	Fuel Type
Ex. 1.	Generator	Unigen	B-2500	A567321C	7/96	7/97	11/2020	250 Hp/HR	Diesel
Ex. 2.	Spray Gun	HVLP Systems	Spra-N-Stay 1100	K26-56-95	01/2017	11/2017	N/A	0.25 gal./HR	Electric Compressor
	Blower Bldg Emergency Generator - 3 MW	MTU	20V4000G94S	95030502169	12/22/2020	TBD	N/A	3 / HR	diesel
								/	
								/	
								/	
								/	
								/	
								/	
								/	
								/	
								/	
								/	
								/	
								/	
								/	
								/	
								/	
								/	
								/	
								/	
								/	
								/	

Unit Number and Description[1]		Manufacturer	Model #	Serial #	Manufacture Date	Installation Date	Modification Date[2]	Process Rate or Capacity (Hp, kW, Btu, ft^3, lbs, tons, yd^3, etc.)[3]	Fuel Type
								/	
								/	
								/	
								/	
								/	

NOTE: To add extra rows in Word, click anywhere in the last row. A plus (+) sign should appear on the bottom right corner of the row. Click the plus (+) sign to add a row. Repeat as needed.

1. Unit numbers must correspond to unit numbers in the previous permit unless a complete cross reference table of all units in both permits is provided.
2. Have changes been made to the unit that impact emissions or that trigger modification as defined in 20.11.41.7.U NMAC?
3. Basis for Equipment Process Rate or Capacity (Manufacturer's data, Field observation/test, etc.) Manufacturer's data
   Submit information for each unit as an attachment.

Emissions Control Equipment Table

Control Equipment Units listed on this Table should either match up to the same Unit number as listed on the Regulated Emission Sources, Controlled Emissions and Stack Parameters Tables (if the control equipment is integrated with the emission unit) or should have a distinct Control Equipment Unit Number and that number should then also be listed on the Stack Parameters Table.

Control Equipment Unit Number and Description		Controlling Emissions for Unit Number(s)	Manufacturer	Model # | Serial #	Date Installed	Controlled Pollutant(s)	% Control Efficiency[1]	Method Used to Estimate Efficiency	Rated Process Rate or Capacity or Flow
Ex. 8b	Baghouse	3,4,5	Best Baghouses	C-12010 | A16925	11/12/2019	PM10, PM2.5	99%	Manufacturer spec sheet	1,500 ACFM
	NONE								

NOTE: To add extra rows in Word, click anywhere in the last row. A plus (+) sign should appear on the bottom right corner of the row. Click the plus (+) sign to add a row. Repeat as needed.

1. Basis for Control Equipment % Efficiency (Manufacturers data, Field Observation/Test, AP-42, etc.). _____
   Submit information for each unit as an attachment.

Exempted Sources and Exempted Activities Table

See 20.11.41 for exemptions.

Unit Number and Description		Manufacturer	Model #	Serial #	Manufacture Date	Installation Date	Modification Date[1]	Process Rate or Capacity (Hp, kW, Btu, ft^3, lbs, tons, yd^3, etc.)[2]	Fuel Type
Ex. 1.	Boiler	Unigen	B-2500	A567321C	7/96	7/97	11/2020	3.5 MMBtu - HR	Natural Gas
Ex. 2.	Hot Water Heater	HVLP Systems	6500A	K26-56-95	01/2017	11/2017	N/A	80 gal. - HR	Natural Gas
	N/A							/	
								/	
								/	
								/	
								/	
								/	
								/	
								/	
								/	
								/	
								/	
								/	
								/	
								/	
								/	
								/	

NOTE: To add extra rows in Word, click anywhere in the last row. A plus (+) sign should appear on the bottom right corner of the row. Click the plus (+) sign to add a row. Repeat as needed.

1. Have changes been made to the unit that impact emissions, that trigger modification as defined in 20.11.41.7.U NMAC, or that change the status from exempt to non-exempt?
2. Basis for Equipment Process Rate or Capacity (Manufacturer's data, Field observation/test, etc.) N/A
   Submit information for each unit as an attachment.

Uncontrolled Emissions Table

(Process potential under physical/operational limitations during a 24 hr/day and 365 day/year = 8760 hrs)

Regulated Emission Units listed on this Table should match up to the same numbered line and Unit as listed on the Regulated Emissions and Controlled Tables. List total HAP values per Emission Unit if overall HAP total for the facility ≥ 1 ton/yr.

Unit Number*	Nitrogen Oxides (NO_X)		Carbon Monoxide (CO)		Nonmethane Hydrocarbons/Volatile Organic Compounds (NMHC/VOCs)		Sulfur Dioxide (SO_2)		Particulate Matter ≤ 10 Microns (PM_{10})		Particulate Matter ≤ 2.5 Microns ($PM_{2.5}$)		Hazardous Air Pollutants (HAPs)		Method(s) used for Determination of Emissions (AP-42, Material Balance, Field Tests, etc.)
	lb/hr	ton/yr	lb/hr	ton/yr	lb/hr	ton/yr	lb/hr	ton/yr	lb/hr	ton/yr	lb/hr	ton/yr	lb/hr	ton/yr	
Example 1.	27.7	121.3	9.1	39.9	1.3	5.7	0.5	2.2	2.0	8.8	0.2	0.4	0.2	0.4	AP-42
Blower Bldg Emergency Generator - 3 MW	46.0	201	5.10	22.3	0.99	4.34	0.021	0.093	0.45	1.95	0.45	1.95	.03976	.1742	Mfr's emissions data sheet for criteria air pollutants*; AP-42 Table 3.4-3 & 4 for HAPs
															*It is assumed that TSP=PM10=PM2.5

Unit Number*	Nitrogen Oxides (NO_X)		Carbon Monoxide (CO)		Nonmethane Hydrocarbons/Volatile Organic Compounds (NMHC/VOCs)		Sulfur Dioxide (SO_2)		Particulate Matter ≤ 10 Microns (PM_{10})		Particulate Matter ≤ 2.5 Microns ($PM_{2.5}$)		Hazardous Air Pollutants (HAPs)		Method(s) used for Determination of Emissions (AP-42, Material Balance, Field Tests, etc.)
	lb/hr	ton/yr	lb/hr	ton/yr	lb/hr	ton/yr	lb/hr	ton/yr	lb/hr	ton/yr	lb/hr	ton/yr	lb/hr	ton/yr	
Totals of Uncontrolled Emissions	46.0	201	5.10	22.3	0.99	4.34	0.021	0.093	0.45	1.95	0.45	1.95	.03976	0.1742	

NOTE: To add extra rows in Word, click anywhere in the second-to-last row. A plus (+) sign should appear on the bottom right corner of the row. Click the plus (+) sign to add a row. Repeat as needed.

*A permit is required and this application along with the additional checklist information requested on the Permit Application checklist must be provided if:
(1) any one of these process units or combination of units, has an uncontrolled emission rate greater than or equal to (≥) 10 lbs/hr or 25 tons/yr for any of the above pollutants, excluding HAPs, based on 8,760 hrs of operation; or
(2) any one of these process units or combination of units, has an uncontrolled emission rate ≥ 2 tons/yr for any single HAP or ≥ 5 tons/yr for any combination of HAPs based on 8,760 hours of operation; or
(3) any one of the process units or combination of units is subject to an Air Board or federal emission limit or standard.

* If all of these process units, individually and in combination, have an uncontrolled emission rate less than (<) 10 lbs/hr or 25 tons/yr for all of the above pollutants (based on 8,760 hrs of operation), but > 1 ton/yr for any of the above pollutants, then a source registration is required. A Registration is required, at minimum, for any amount of HAP emissions. Please complete the remainder of this form.

Controlled Emissions Table

(Based on current operations with emission controls OR requested operations with emission controls)

Regulated Emission Units listed on this Table should match up to the same numbered line and Unit as listed on the Regulated Emissions and Uncontrolled Tables. List total HAP values per Emission Unit if overall HAP total for the facility is ≥ 1 ton/yr.

Unit Number	Nitrogen Oxides (NO_X)		Carbon Monoxide (CO)		Nonmethane Hydrocarbons/Volatile Organic Compounds (NMHC/VOCs)		Sulfur Dioxide (SO_2)		Particulate Matter ≤ 10 Microns (PM_{10})		Particulate Matter ≤ 2.5 Microns ($PM_{2.5}$)		Hazardous Air Pollutants (HAPs)		Control Method	% Efficiency[1]
	lb/hr	ton/yr	lb/hr	ton/yr	lb/hr	ton/yr	lb/hr	ton/yr	lb/hr	ton/yr	lb/hr	ton/yr	lb/hr	ton/yr		
Example 1.	27.7	55.4	9.1	18.2	1.3	2.6	0.5	1.0	2.0	4.0	0.2	0.088	0.2	0.088	Operating Hours	N/A
Blower Bldg Emergency Generator - 3 MW	46.0	4.6	5.10	0.51	0.99	0.10	0.021	0.0021	0.45	0.045	0.45	0.045	.03976	.00398	Operating Hours	N/A

Unit Number	Nitrogen Oxides (NO_X)		Carbon Monoxide (CO)		Nonmethane Hydrocarbons/Volatile Organic Compounds (NMHC/VOCs)		Sulfur Dioxide (SO_2)		Particulate Matter ≤ 10 Microns (PM_{10})		Particulate Matter ≤ 2.5 Microns ($PM_{2.5}$)		Hazardous Air Pollutants (HAPs)		Control Method	% Efficiency[1]
	lb/hr	ton/yr	lb/hr	ton/yr	lb/hr	ton/yr	lb/hr	ton/yr	lb/hr	ton/yr	lb/hr	ton/yr	lb/hr	ton/yr		
Totals of Controlled Emissions	46.0	4.60	5.10	0.51	0.99	0.10	0.021	.0021	0.45	0.045	0.446	0.045	.03976	.00398		

NOTE: To add extra rows in Word, click anywhere in the second-to-last row. A plus (+) sign should appear on the bottom right corner of the row. Click the plus (+) sign to add a row. Repeat as needed.

1. Basis for Control Equipment % Efficiency (Manufacturers data, Field Observation/Test, AP-42, etc.). Operating hours
   Submit information for each unit as an attachment.

Hazardous Air Pollutants (HAPs) Emissions Table

Report the Potential Emission Rate for each HAP from each source on the Regulated Emission Sources Table that emits a given HAP. Report individual HAPs with ≥ 1 ton/yr total emissions for the facility on this table. Otherwise, report total HAP emissions for each source that emits HAPs and report individual HAPs in the accompanying application package in association with emission calculations. If this application is for a Registration solely due to HAP emissions, report the largest HAP emissions on this table and the rest, if any, in the accompanying application package.

Unit Number	Total HAPs		Benzene		Toluene		Xylenes		Formaldehyde		Acetaldehyde		Napthalene		Acrolein	
	lb/hr	ton/yr	lb/hr	ton/yr	lb/hr	ton/yr	lb/hr	ton/yr	lb/hr	ton/yr	lb/hr	ton/yr	lb/hr	ton/yr	lb/hr	ton/yr
Example 1.	6.3	18.2	3.2	8.5	2.3	7.7	0.5	1.0	0.3	1.0	N/A	N/A	N/A	N/A	N/A	N/A
Blower Bldg Emergency Generator - 3 MW	.0398	.174	.0207	.0906	.00749	.0328	.00514	.0225	.00210	.00921	.00067	.00294	.00346	.0152	.00021	.00092
Totals of HAPs for all units:	.0398	.174	.0207	.0906	.00749	.0328	.00514	.0225	.00210	.00921	.00067	.00294	.00346	.0152	.00021	.00092

NOTE: To add extra rows in Word, click anywhere in the second-to-last row. A plus (+) sign should appear on the bottom right corner of the row. Click the plus (+) sign to add a row. Repeat as needed.

Copy and paste the HAPs table here if need to list more individual HAPs.

Purchased Hazardous Air Pollutant Table*

Product Categories (Coatings, Solvents, Thinners, etc.)	Hazardous Air Pollutant (HAP), or Volatile Hazardous Air Pollutant (VHAP) Primary To The Representative As Purchased Product	Chemical Abstract Service Number (CAS) of HAP or VHAP from Representative As Purchased Product	HAP or VHAP Concentration of Representative As Purchased Product (pounds/gallon, or %)	Concentration Determination (CPDS, MSDS, etc.)[1]	Total Product Purchases For Category	(-)	Quantity of Product Recovered & Disposed For Category	(=)	Total Product Usage For Category
Example 1. Surface Coatings	Xylene	1330207	4.0 lbs/gal	MSDS	lbs/yr 100 gal/yr	(-)	lbs/yr 0 gal/yr	(=)	lbs/yr 100 gal/yr
Example 2. Cleaning Solvents	Toluene	108883	70%	Product Label	lbs/yr 200 gal/yr	(-)	lbs/yr 50 gal/yr	(=)	lbs/yr 150 gal/yr
1. N/A	N/A				lbs/yr gal/yr	(-)	lbs/yr gal/yr	(=)	lbs/yr gal/yr
2.					lbs/yr gal/yr	(-)	lbs/yr gal/yr	(=)	lbs/yr gal/yr
3.					lbs/yr gal/yr	(-)	lbs/yr gal/yr	(=)	lbs/yr gal/yr
4.					lbs/yr gal/yr	(-)	lbs/yr gal/yr	(=)	lbs/yr gal/yr
5.					lbs/yr gal/yr	(-)	lbs/yr gal/yr	(=)	lbs/yr gal/yr
6.					lbs/yr gal/yr	(-)	lbs/yr gal/yr	(=)	lbs/yr gal/yr
7.					lbs/yr gal/yr	(-)	lbs/yr gal/yr	(=)	lbs/yr gal/yr
8.					lbs/yr gal/yr	(-)	lbs/yr gal/yr	(=)	lbs/yr gal/yr
9.					lbs/yr gal/yr	(-)	lbs/yr gal/yr	(=)	lbs/yr gal/yr
					lbs/yr gal/yr	(-)	lbs/yr gal/yr	(=)	lbs/yr gal/yr
TOTALS					lbs/yr gal/yr	(-)	lbs/yr gal/yr	(=)	lbs/yr gal/yr

NOTE: To add extra rows in Word, click anywhere in the second-to-last row. A plus (+) sign should appear on the bottom right corner of the row. Click the plus (+) sign to add a row. Repeat as needed.

1. Submit, as an attachment, information on one (1) product from each Category listed above which best represents the average of all the products purchased in that Category.

***NOTE: A Registration is required, at minimum, for any amount of HAP or VHAP emission.**
Emissions from purchased HAP usage should be accounted for on previous tables as appropriate.
A permit may be required for these emissions if the source meets the requirements of 20.11.41.

Material and Fuel Storage Table

(Tanks, barrels, silos, stockpiles, etc.)

Storage Equipment		Product Stored	Capacity (bbls, tons, gals, acres, etc.)	Above or Below Ground	Construction (Welded, riveted) & Color	Installation Date	Loading Rate[1]	Offloading Rate[1]	True Vapor Pressure	Control Equipment	Seal Type	% Eff.[2]
Ex. 1.	Tank	Diesel Fuel	5,000 gal.	Below	Welded/Brown	3/93	3,000 gal/hr	500 gal/hr	N/A	N/A	N/A	N/A
Ex. 2.	Barrels	Solvent	55 gal. drum	Above	Welded/Green	N/A	N/A	N/A	N/A	N/A	N/A	N/A
N/A		none										

NOTE: To add extra rows in Word, click anywhere in the last row. A plus (+) sign should appear on the bottom right corner of the row. Click the plus (+) sign to add a row. Repeat as needed.

1. Basis for Loading/Offloading Rate (Manufacturer's data, Field Observation/Test, etc.). N/A
   Submit information for each unit as an attachment.
2. Basis for Control Equipment % Efficiency (Manufacturer's data, Field Observation/Test, AP-42, etc.). N/A
   Submit information for each unit as an attachment.

Stack Parameters Table

If any equipment from the Regulated Emission Sources Table is also listed in this Stack Table, use the same numbered line for the emission unit on both tables to show the association between the Process Equipment and its stack.

Unit Number and Description		Pollutant (CO, NOx, PM10, etc.)	UTM Easting (m)	UTM Northing (m)	Stack Height (ft)	Stack Exit Temp. (°F)	Stack Velocity (fps)	Stack Flow Rate	Stack Inside Diameter (ft)	Stack Type
Ex. 1.	Generator	CO, NOx, PM10, PM2.5, SO2	349430.28	3884014.64	18	900 °F	150 fps	4524 acfm	0.8	Rain Cap
Ex. 2.	Spray Gun	PM10, xylene, toluene	348540.1	3882928.5	9.2	Ambient	50 fps	589 scfm	0.5	Vertical
	Blower Bldg Emergency Generator - 3 MW	CO, NOX, SO2, VOC, PM10, PM2.5, HAPs	***	***	12.8	967 degrees F	189 fps	24,750 cfm	1.67	Vertical
			***UTM coords. won't be known until installation is complete							Vertical
										Vertical
										Vertical
										Vertical

NOTE: To add extra rows in Word, click anywhere in the last row. A plus (+) sign should appear on the bottom right corner of the row. Click the plus (+) sign to add a row. Repeat as needed.

I, the undersigned, an authorized representative of the applicant company, certify that to the best of my knowledge, the information stated on this application, together with associated drawings, specifications, and other data, give a true and complete representation of the existing, modified existing, or planned new stationary source with respect to air pollution sources and control equipment. I also understand that any significant omissions, errors, or misrepresentations in these data will be cause for revocation of part or all of the resulting registration or permit.

Signed this 3rd day of June, 20 21

Stan Allred
Print Name

Chief Financial and Operations Officer
Print Title

Signature

ALLIANT ENVIRONMENTAL, LLC			**Area Map**	**Albuquerque Bernalillo County Water Utility Authority**	
Scale: 1:20,000	Drawn by: MDF	Date: 8/20/2020	**Southside Water Reclamation Plant** N 35° 1' 1.7" Latitude W 106° 39' 57.7" Longitude	Project No.: 082-002	File Name: **SWRP Area Map**	Figure: 2-1
	Chk'd by:	Date:			

Albuquerque Bernalillo County
Water Utility Authority

SOUTHSIDE WATER RECLAMATION PLANT (SWRP)
GENERAL SITE PLAN

RIVERSIDE DRAIN
SAN JOSE DRAIN
BIKE PATH
MRGCD MAINTENANCE ROAD
RECLAMATION RD.
NORTH ENTRANCE
2ND STREET
RR
WATER QUALITY LAB
SEPTAGE RECEIVING FACILITY
STORAGE
VACTOR BLDG.
VEHICLE MAINT. BLDG.
PRELIMINARY TREATMENT FACILITY (PTF)
MAINTENANCE FACILITY
ADMIN. BLDG.
SOUTH ENTRANCE
OLD PT FACILITY
DEWATERING FACILITIES
PRIMARY CLARIFIERS
STORAGE BLDGS.
REUSE FILTER & PUMP STATION BUILDINGS
NORTH FINAL CLARIFIERS
NORTH BLOWER BUILDING
O&M FACILITY
TRAINING & SAFETY BLDG.
NORTH ST.
NORTH ST. SW
OUTFALL STRUCTURE
← TO RIO GRANDE
SIPHON TOWERS
UV DISINFECTION
NORTH PROCESS BASINS
PRIMARY CLARIFIERS
FLARE
ANAEROBIC DIGESTERS
GAS HOLDERS
SLUDGE DRYING BEDS (NOT USED)
PILOT WETLANDS (ABANDONED)
FIS
PNM SUBSTATION
SLUDGE DRYING BEDS (NOT USED)
SOUTH FINAL CLARIFIERS
SOUTH PROCESS BASINS
SOUTH BLOWER BUILDING
DAF FACILITY
ANAEROBIC DIGESTERS
NORTH CO-GENERATION FACILITIES
SOUTH
ACTIVATED SLUDGE PUMP STATION
SOUTH PROCESS BASINS
SOLAR PANEL ARRAY
LOOP RD.
MARY AVE. SW
BOWERS RD. SW
PROSPERITY AVE. SE
BARR MAIN CANAL

Approximate location of proposed 3 MW generator

Figure 2-2 LEGEND

- FIRE HYDRANT
- VALVE
- DROP INLET/CATCH BASIN (DI)
- MANHOLE (MH)
- ELECTRICAL BOX
- LIGHT POLE
- POST
- SIGN (S)
- MISCELLANEOUS/ UNIDENTIFIED OBJECT
- BUILDING OR STRUCTURE
- PROPERTY LINE

N

0 22.2' 66.7' 133.3'
GRAPHIC SCALE

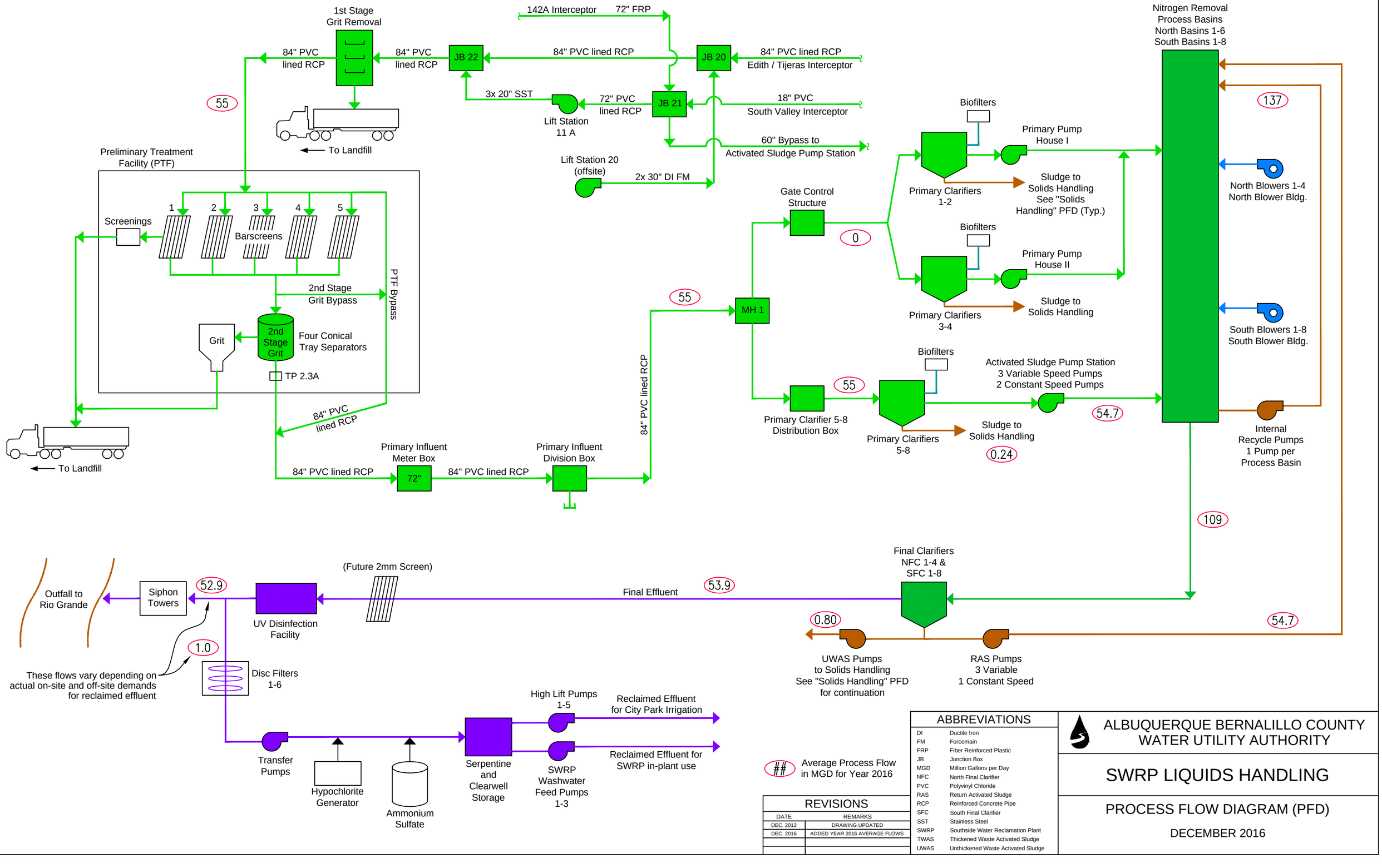

REVISIONS	
DATE	REMARKS
DEC. 2012	DRAWING UPDATED
DEC. 2016	ADDED YEAR 2016 AVERAGE FLOWS

ABBREVIATIONS	
DI	Ductile Iron
FM	Forcemain
FRP	Fiber Reinforced Plastic
JB	Junction Box
MGD	Million Gallons per Day
NFC	North Final Clarifier
PVC	Polyvinyl Chloride
RAS	Return Activated Sludge
RCP	Reinforced Concrete Pipe
SFC	South Final Clarifier
SST	Stainless Steel
SWRP	Southside Water Reclamation Plant
TWAS	Thickened Waste Activated Sludge
UWAS	Unthickened Waste Activated Sludge

ALBUQUERQUE BERNALILLO COUNTY WATER UTILITY AUTHORITY

SWRP LIQUIDS HANDLING

PROCESS FLOW DIAGRAM (PFD)

DECEMBER 2016

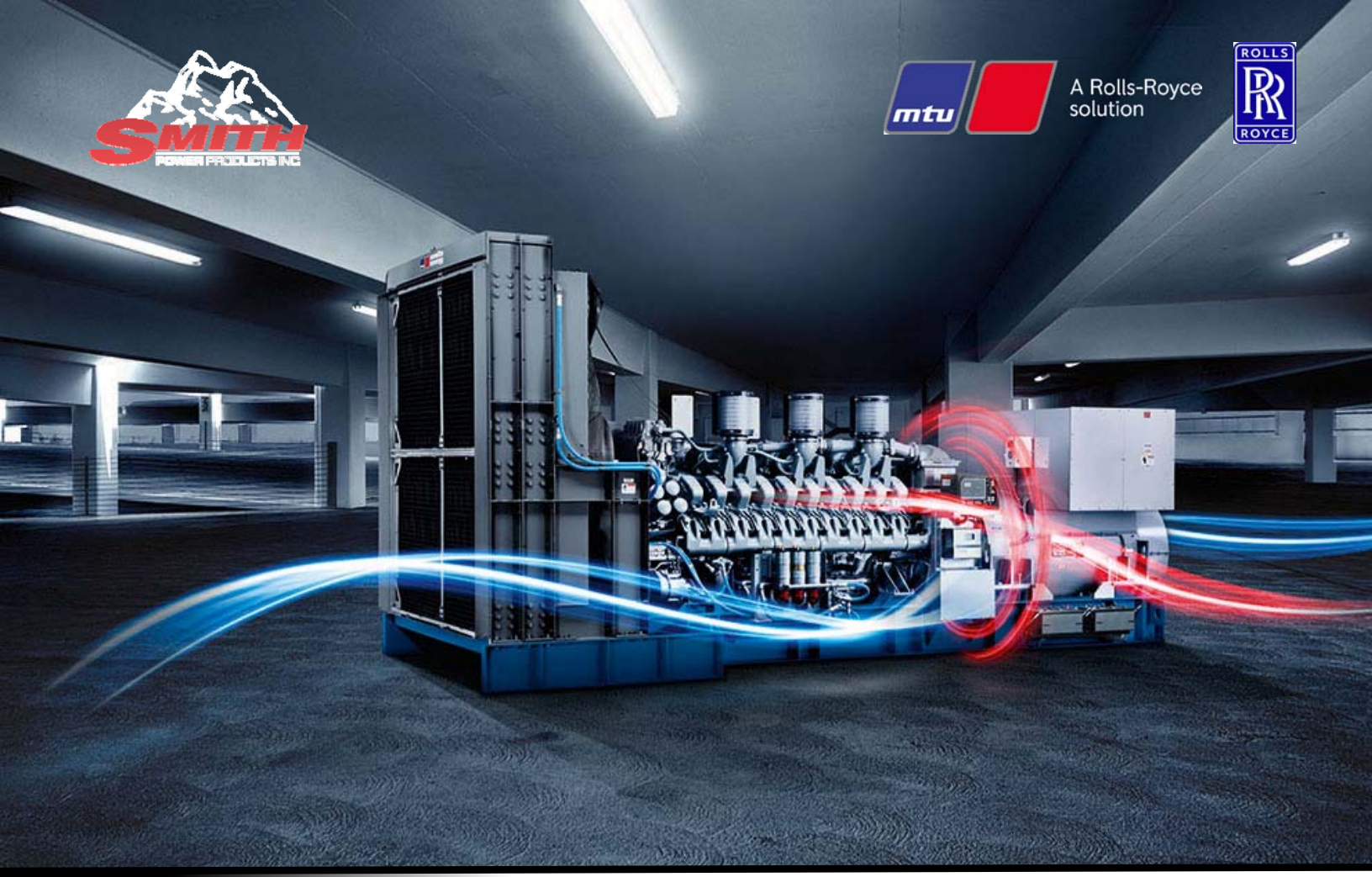

SUBMITTAL

Albuquerque Bernalillo County Water Utility Authority

3000kW Diesel Generator

SEPT2020
REV-1

Submitted by:
Tim Amezcua
Smith Power Products, Inc.
575-408-6207
tamezcua@smithppi.com

Weights and dimensions

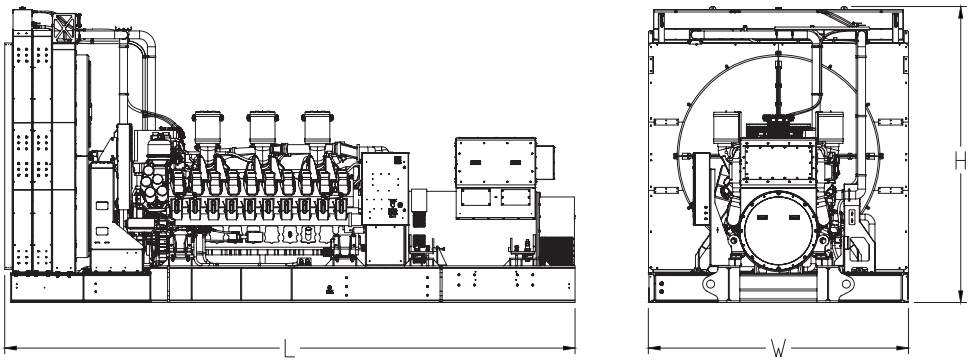

Drawing above for illustration purposes only, based on standard open power 480 volt generator set. Lengths may vary with other voltages. Do not use for installation design. See website for unit specific template drawings.

System	Dimensions (L x W x H)	Weight (less tank)
Open power unit (OPU)	7,335 x 3,072 x 3,590 mm (288.77 x 120.93 x 141.34 in)	24,634 kg (54,318 lb)

Weights and dimensions are based on open power units and are estimates only. Consult the factory for accurate weights and dimensions for your specific generator set.

Sound data

Unit type	Standby full load
Level 0: Open power unit: dB(A)	94.6

Sound data is provided at 7 m (23 ft). Generator set tested in accordance with ISO 8528-10 and with infinite exhaust.

Emissions data

NO_x + NMHC	CO	PM
5.1	0.6	0.03

— All units are in g/hp-hr and shown at 100% load (not comparable to EPA weighted cycle values). Emission levels of the engine may vary with ambient temperature, barometric pressure, humidity, fuel type and quality, installation parameters, measuring instrumentation, etc. The data was obtained in compliance with US EPA regulations. The weighted cycle value (not shown) from each engine is guaranteed to be within the US EPA standards.

Rating definitions and conditions

— Standby ratings apply to installations served by a reliable utility source. The standby rating is applicable to varying loads for the duration of a power outage. No overload capability for this rating. Ratings are in accordance with ISO 8528-1, ISO 3046-1, BS 5514, and AS 2789. Average load factor: ≤ 85%.
— Consult your local MTU Distributor for derating information.

Subject to change. | 231218 | 2020-02

UL LISTED This drawing contains proprietary, confidential design data, which is the exclusive property of SST. Submission of this data does not convey the right to copy, sell, loan, distribute, or otherwise disclose said data without the prior written permission of SST.

ENCLOSURE PANELS DO NOT NEED TO BE HOT DIPPED.
STEEL IS MADE WITH GALVANEAL IN IT ALREADY.

BILL OF MATERIALS

NUMBER	QTY	DESCRIPTION
1	1	BIRD SCREEN, DISCHARGE ELBOW
2	1	DISCHARGE ELBOW (PLENUM)
3	2	42" X 79.5" SINGLE DOOR W/ FREEZER LATCHES AND HINGES CONSTRUCTED OUT OF 12 GAUGE GALVANEAL
4	1	CONTROL PANEL
5	2	42" X 79.5" DOUBLE DOORS W/ FREEZER LATCHES AND HINGES CONSTRUCTED OUT OF 12 GAUGE GALVANEAL
6	1	GENERATOR LS941-L80 CONNECTION BOX
7	1	48" BAFFLE ASSEMBLY
8	1	FIXED INTAKE LOUVERS
9	4	DISCHARGE GRAVITY DAMPERS (ALUMINUM)
10	1	DISCHARGE ELBOW ACCESS DOOR
11		W12 X 16# ENCLOSURE FRAME
12	4	ENCLOSURE LIFTING LUG (ENCLOSURE REMOVAL ONLY)
13	1	120/208V 3PH 125AMP LOAD CENTER
14	1	COMPLETE INTERNAL EXHAUST SYSTEM (REPRESENTATION ONLY)
15	4	4' LED LIGHTS (WET LOCATION)
16	2	24V JELLY JAR VAPOR PROOF LIGHTS W/ 60 MIN. TIMER
17	1	30KVA 480V TO 208 / 120 3PH TRANSFORMER
18	52	ENCLOSURE WALL PANELS CONSTRUCTED OUT OF 14 GAUGE GALVANEAL

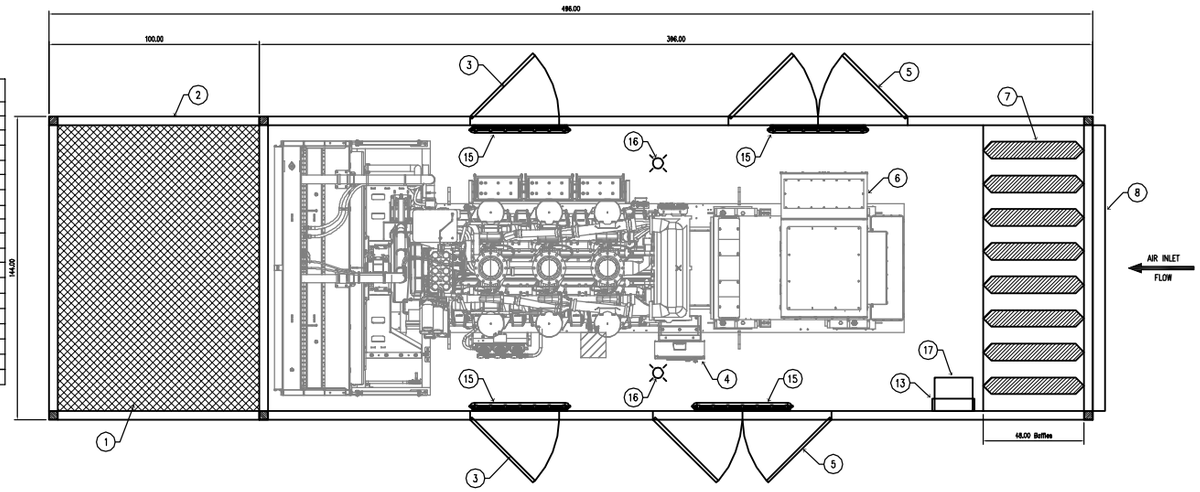

PLAN VIEW

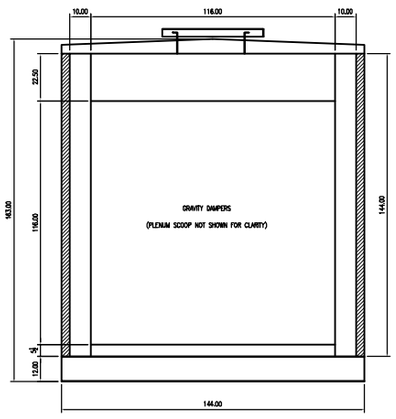

DISCHARGE END VIEW

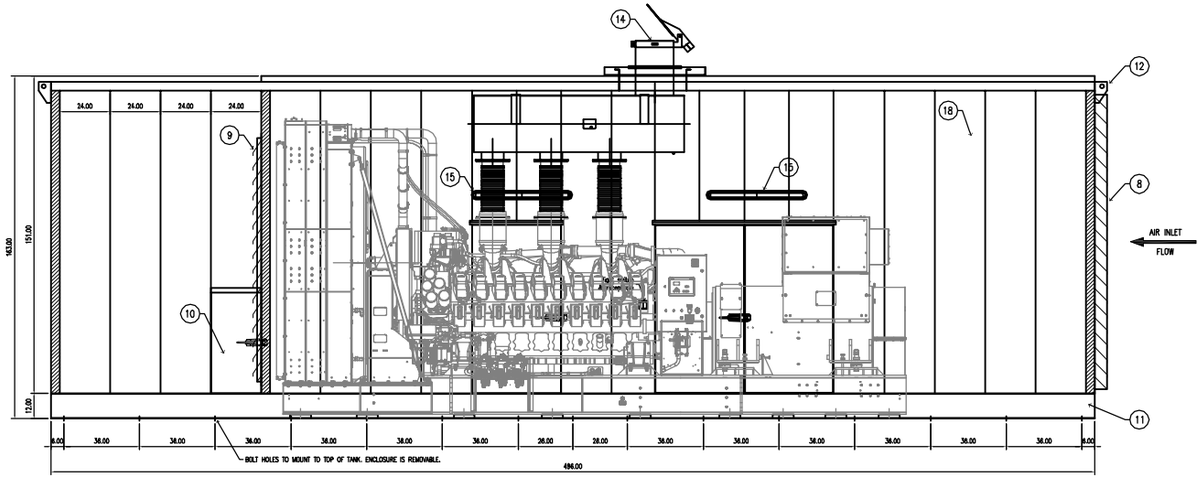

ELEVATION VIEW

Superior Systems & Technologies 274 County Rd 287 Merkel Tx 79536 325-690-0248 Fax: -4111	LEVEL 1-SOUND ATTENUATED (80 DBA @23')	P.O.#: ----	GENSET: 3000KW	NAME: ----	DATE: ----
		WO #: ----	TANK WEIGHT: 25,800 LBS	☐ APPROVED AS IS: Manufacturing may proceed	
DRAWN BY: F.Ontiveros	SCALE: NTS	CUSTOMER: SMITH POWER PRDUCTS	QUOTE #: 07644	TANK COLOR: ----	☐ APPROVED WITH NOTED CHANGES: Resubmit drawing: manufacturing may proceed.
DATE: 09-08-20	SHEET: 1 OF 1	JOB NAME: ABQ BERNALILLO COUNTY	REVISION: A	DRAWING #: SCGBT-4,400-07644	☐ NOT APPROVED: Correct drawing as noted and resubmit for approval before manufacturing begins.

SUBMITTAL DRAWINGS

Contents

	Genset	Marine	O & G	Rail	C & I
Application	X				
Engine model	20V4000G94S				
Rated power [kW]	3490				
Rated speed [rpm]	1800				
Applicationgroup	3D				
Legislative body	EPA Stationary EMERG T2 (40CFR60)				
Test cycle	D2				
Data Set No.	XZ54954100429				
Data Set Basis	US EPA Nonroad Tier 2 (40CFR1039)				
Fuel sulphur content [ppm]	7.8				

Content **Page**

Disclaimer 2

Emission data sheet (EDS) 3

Not to exceed emission values 5

Description of Revision	Frequency

Data generated by EDS Creator version 1.0 and uniplot.
Ref.-dataset: RP057_121219_1800_D2_Cycle;1_D;1.nc for 1115 in EDS platfrom.

Configuration-ID	Documentation
1115	For Nick Paolo

MTU
Friedrichshafen GmbH

All industrial property rights reserved. Disclosure, reproduction or use for any other purpose is prohibited unless our express permission has been given. Any infringement results in liability to pay damages.

PDF	Name	Project no. **0**	Size **A4**
Configurator	Deifel, Stefanie (TATC)	Order no. **0**	
Approver1	Kneifel, Alexander (TSLE)	EDS-ID **425-02.06.2021**	
Approver2	Pizzuto, Gus (TATC)		
Approver3	Buecheler, Otto (TVM)		
Approver4			
User	NA\PONSTEIN		

Engine model
20V4000G94S

Title
Emission data sheet

Emissionstage
EPA Stationary EMERG T2 (40CFR60)

Emissionstage basis
US EPA Nonroad Tier 2 (40CFR1039)

General Disclaimers (valid for Measured and NTE values)

Please note that these data are physical and/or technical values only referring to and representing a normative defined operating condition. Any change in operating time and conditions will have impact on physical values and engine behavior, which must be considered and assessed within the complete propulsion system especially in regard to emission compliance and product safety.

Measurements listed in this EDS are representative of the listed engine rating at the time of testing. These measurements and results can change according to instrumentation, boundary condition, and engine to engine variability. In addition - changes to the engine family hard or software may occur which could result in changes to some of the listed values.

Emissions data measurement procedures are conducted according to applicable rules and standards as per “Emission Stage/Optimization”. Potential deviations from these procedures are documented internally.

The listed emission values relate to the corresponding certification data. Seller doesn´t take any responsibility or liability neither out or in connection with the contract nor on any other basis
- beyond these specified operating conditions of the engine
- and for any installation/modification of the entire propulsion system by the customer itself or any third party
and the customer will indemnify MTU on first demand for any third party claim out or in connection with this.

Seller reserves the right to amend specifications and information without notice and without obligation or liability. No liability for any errors, facts or opinions is accepted. Customers must satisfy themselves as to the suitability of this product for their application. No responsibility for any loss as a result of any person placing reliance on any material contained in this data sheet will be accepted.

Seller reserves all rights in the information contained in this data sheet. It shall not be reproduced, made available to a third party or otherwise used in any way whatsoever.

When applicable, emission values are measured after combined exhaust streams.

Measured Emissions data is based on single operating points and thus cannot be used to compare to regulations which use values based on a weighted cycle.

Field emission test data are not guaranteed to these levels. Actual field test results may vary due to test site conditions, installation, fuel specification, test procedures, and instrumentation. Over time deterioration may occur which may have an impact on emission levels.

The SO2 emission rates comprehend exclusively the SO2 content as found in the fuel source, oil consumption effects are not included. Variation of sulfur content in the fuel changes only the stated SO2 emissions, cross sensitivity to other emissions (e.g. particulates) is not possible.

All values based on metric units, inaccuracies for non metric values can occur, values are not binding.

Specific to gas engines: The listed emission values are based on gas composition at the time of certification measurement. Gas composition is as displayed in the EDS-document. Carbon dioxide and methane concentrations have direct influence on the corresponding displayed carbon dioxide and methane emissions.

EAT Specific Disclaimers (valid for EDS values)

NH3 emissions levels measured with AVL SESAM i60/ 4 FT Multi Component Exhaust Measurement System (FTIR) including EPA 40 CFR 1065 legislation compliant automated checks for linearity.
Generators or engines with exhaust after-treatment systems require a stabilization period of approximately 1 hour to ensure stable temperatures across SCR prior to performing an emissions test. Performing emissions measurements before a stable temperature has been achieved can result in inconsistent emission values. NOx Values only applicable if temperatures across SCR reached for DEF Dosing.

NTE Disclaimers (valid for NTE calculated values)

Calculated not to exceed values (NTE) are not proven by tests and therefore the accuracy is not guaranteed.

All emission data shown in chapters Emission Data Sheet, Not to Exceed Values, and Type Approval were gathered from a corresponding certification engine under test conditions shown above and complying to corresponding TEN data.

Description of Revision	Frequency
Data generated by EDS Creator version 1.0 and uniplot. Ref.-dataset: RP057_121219_1800_D2_Cycle;1_D;1.nc for 1115 in EDS platfrom.	

Configuration-ID	Documentation
1115	For Nick Paolo

MTU
Friedrichshafen GmbH

All industrial property rights reserved. Disclosure, reproduction or use for any other purpose is prohibited unless our express permission has been given. Any infringement results in liability to pay damages.

PDF	Name	Project no.	Size
		0	**A4**
Configurator	Deifel, Stefanie (TATC)	Order no. **0**	
Approver1	Kneifel, Alexander (TSLE)	EDS-ID	
Approver2	Pizzuto, Gus (TATC)	**425-02.06.2021**	
Approver3	Buecheler, Otto (TVM)		
Approver4			
User	NA\PONSTEIN		

Engine model
20V4000G94S

Title
Emission data sheet

Emissionstage
EPA Stationary EMERG T2 (40CFR60)

Emissionstage basis
US EPA Nonroad Tier 2 (40CFR1039)

Sheet **2** of **5**

Engine data

	Genset	Marine	O & G	Rail	C & I
Application	X				
Engine model	20V4000G94S				
Applicationgroup	3D				
Legislative body	EPA Stationary EMERG T2 (40CFR60)				
Test cycle	D2				
Fuel sulphur content [ppm]	7.8				
mg/mN^3 values base on residual oxygen value of [%]	Measured				

Engine raw emissions*

Cycle point	[-]	n1	n2	n3	n4	n5
Power	kW	3490	2617	1745	872	349
Power relative	[-]	1	0.75	0.5	0.25	0.1
Engine speed	rpm	1800	1800	1800	1800	1800
Engine speed relative	[-]	1	1	1	1	1
Filter smoke number	FSN	0.26	0.33	0.14	0.4	0.1
Exhaust temperature after ETC	grdC	519.2	452.8	418.1	377.7	256.7
Exhaust back pressure after ETC (static)	mbar	66	49	30	15	7
Exhaust back pressure after ETC (total)	mbar	77	57	35	17	8
Exhaust mass flow wet	kg/h	19326.9	17162	13617.4	9295.1	6582.8
NOX-Emissions specific	g/kWh	6.49	5.51	4.8	3.68	10.31
SO2-Emissions specific	g/kWh	0.003	0.003	0.003	0.004	0.005
CO-Emissions specific	g/kWh	0.72	0.79	0.59	1.41	6.42
HC1-Emissions specific	g/kWh	0.14	0.21	0.32	0.7	2.18
NMHC-Emissions specific	g/kWh	0.14	0.21	0.32	0.7	2.16
NOX+HC1-Emissions specific	g/kWh	6.63	5.72	5.12	4.38	12.48
NOX+NMHC-Emissions specific	g/kWh	6.63	5.72	5.12	4.38	12.47
CO2-Emissions specific	g/kWh	664.5	667.9	701.6	801.1	970.1
PM-Emissions specific (Meas.)	g/kWh	0.063	0.088	0.081	0.234	0.65
NOX-Emissions (based on O2 meas)	mg/m3N	1856	1314	955	531	827

Description of Revision	Frequency

Data generated by EDS Creator version 1.0 and uniplot.
Ref.-dataset: RP057_121219_1800_D2_Cycle;1_D;1.nc for 1115 in EDS platfrom.

Configuration-ID	Documentation
1115	For Nick Paolo

MTU
Friedrichshafen GmbH

All industrial property rights reserved. Disclosure, reproduction or use for any other purpose is prohibited unless our express permission has been given. Any infringement results in liability to pay damages.

	Name
PDF	
Configurator	Deifel, Stefanie (TATC)
Approver1	Kneifel, Alexander (TSLE)
Approver2	Pizzuto, Gus (TATC)
Approver3	Buecheler, Otto (TVM)
Approver4	
User	NA\PONSTEIN

Engine model
20V4000G94S

Project no.
0

Order no.
0

Size
A4

EDS-ID
425-02.06.2021

Title
Emission data sheet

Emissionstage
EPA Stationary EMERG T2 (40CFR60)

Emissionstage basis
US EPA Nonroad Tier 2 (40CFR1039)

Sheet
3
of
5

ABQ Bernalillo County Water

UNITED STATES ENVIRONMENTAL PROTECTION AGENCY
2020 MODEL YEAR
CERTIFICATE OF CONFORMITY
WITH THE CLEAN AIR ACT

OFFICE OF TRANSPORTATION AND AIR QUALITY
ANN ARBOR, MICHIGAN 48105

Certificate Issued To: **MTU America, Inc.**
(U.S. Manufacturer or Importer)

Certificate Number: LMDDL95.4GTZ-007

Effective Date: 01/29/2020

Expiration Date: 12/31/2020

Byron J. Bunker, Division Director
Compliance Division

Issue Date: 01/29/2020

Revision Date: N/A

Model Year: 2020
Manufacturer Type: Original Engine Manufacturer
Engine Family: LMDDL95.4GTZ

Mobile/Stationary Indicator: Stationary
Emissions Power Category: 560<kW<=2237
Fuel Type: Diesel
After Treatment Devices: No After Treatment Devices Installed
Non-after Treatment Devices: Electronic Control, Smoke Puff Limiter

Pursuant to Section 111 and Section 213 of the Clean Air Act (42 U.S.C. sections 7411 and 7547) and 40 CFR Part 60, and subject to the terms and conditions prescribed in those provisions, this certificate of conformity is hereby issued with respect to the test engines which have been found to conform to applicable requirements and which represent the following engines, by engine family, more fully described in the documentation required by 40 CFR Part 60 and produced in the stated model year.

This certificate of conformity covers only those new compression-ignition engines which conform in all material respects to the design specifications that applied to those engines described in the documentation required by 40 CFR Part 60 and which are produced during the model year stated on this certificate of the said manufacturer, as defined in 40 CFR Part 60.

It is a term of this certificate that the manufacturer shall consent to all inspections described in 40 CFR 1068 and authorized in a warrant or court order. Failure to comply with the requirements of such a warrant or court order may lead to revocation or suspension of this certificate for reasons specified in 40 CFR Part 60. It is also a term of this certificate that this certificate may be revoked or suspended or rendered void *ab initio* for other reasons specified in 40 CFR Part 60.

This certificate does not cover engines sold, offered for sale, or introduced, or delivered for introduction, into commerce in the U.S. prior to the effective date of the certificate.

The actual engine power may lie outside the limits of the Emissions Power Category shown above. See the certificate application for details.

Water Authority - Southside Water Reclamation Plant

Blower Building Emergency Generator 3MW

Emission unit number(s):	n/a		
Source description:	Diesel Engine		
Manufacturer:	MTU		
Model:	20V4000G94S		Manufacture Date:12/20/2020
Serial No.:	95030502169		
Horse Power:	4307	hp	
Annual Hours of Operation:	200	hours	
Maximum Fuel Consumption:	207	gal/hr	
Fuel Density:	7.0	lb/gal	
Fuel Heat Value:	18390	Btu/lb	
Fuel Heat Value:	0.13	MMBtu/gal	
Heat Input:	26.65	MMBtu/hr	

Emission Calculations

Uncontrolled (maximum operating hours 8,760 hours/year)

NOx[1]	CO	VOC[1]	SO_2[1]	PM[2]		
6.49	0.72	0.14	0.003	0.063	gram/KW-hr	Manufacurer's data sheet-see attached
4.84	0.54	0.104	0.002	0.047	gram/hp-hr	gram/hp-hr = [gram/KW-hr]/1.341
46.0	5.1	0.99	0.021	0.45	lb/hr	Hourly Emission Rate
201	22.3	4.34	0.093	1.95	tpy	Annual emission rate

Notes:

[1] MTU manufacturer data.

[2] PM = TSP = PM-10 = PM-2.5 (conservative assumption)

Example calculation for NOx, CO, VOC, PM (lb/hr) = (g/hp-hr)*(hp)*(0.002205 lb/g)

Controlled (maximum operating hours 200 hours/year)

NOx	CO	VOC	SO_2	PM*		CO_2	
46.0	**5.10**	**0.99**	**0.021**	**0.45**	**lb/hr**	**4996.12**	**lb/hr**
4.60	**0.51**	**0.10**	**0.0021**	**0.045**	**tpy**	**499.61**	**tpy**

AP-42 Table 3.4-1

For informational purposes only

HAP Emission Calculations

Benzene	Toluene	Xylenes	Formaldehyde	Acetaldehyde	Acrolein	Naphthalene	Total HAPs		
0.00078	0.00028	0.00019	0.000079	0.000025	0.0000079	0.00013	0.0015	lb/MMBtu	AP 42 Table 3.4-3 & 4
0.0207	**0.00749**	**0.00514**	**0.00210**	**0.00067**	**0.00021**	**0.00346**	**0.0398**	Hourly emission rate (lb/hr)	
0.0906	**0.0328**	**0.0225**	**0.00921**	**0.00294**	**0.00092**	**0.0152**	**0.174**	Uncontrolled annual emission rate (tpy)	
0.00207	**0.00075**	**0.000514**	**0.00021**	**0.00007**	**0.00002**	**0.00035**	**0.00398**	Controlled annual emission rate (tpy)	