CITY OF ALBUQUERQUE
ENVIRONMENTAL HEALTH DEPARTMENT
AIR QUALITY PROGRAM

PERMIT MODIFICATION APPLICATION

University of New Mexico Hospitals (UNMH)
University Psychiatric Center

Prepared By:

Gregory Smith – Healthcare Facilities Planner

University of New Mexico Hospitals (UNMH)
2211 Lomas Blvd. NE
Albuquerque, NM 87106
(505) 446-0106

Michael Celente – Senior Consultant

Trinity Consultants, Inc
9400 Holly Ave NE
Building 3, Suite B
Albuquerque, NM 87122
(505) 266-6611

September 2022

Project 223201.0107

Trinity Consultants

TABLE OF CONTENTS

1. GENERAL INFORMATION **1-1**
1.0 Executive Summary **1-1**

2. DESCRIPTION OF FACILITY AND EMISSIONS INFORMATION **2-1**
2.1 Description of the Facility **2-1**
2.2 Process Flow Sheets **2-2**
2.3 Air Pollutant Emissions and Calculation Methodology **2-3**
2.4 Emission Calculations **2-4**
2.5 Supporting Information **2-5**

3. OPERATIONAL PLAN – AIR EMISSIONS DURING SSM **3-1**
3.1 Emergency Generator Operational Plan **3-1**
3.1.1 Emergency Generator Startup Procedure *3-1*
3.1.2 Emergency Generator Shutdown Procedure *3-1*
3.1.3 Emergency Generator Maintenance *3-1*

4. AIR DISPERSION MODELING ANALYSIS **4-1**

APPENDIX A. APPLICATION FORMS **A-1**

APPENDIX B. PRE-PERMIT APPLICATION MEETING **B-1**

APPENDIX C. NOTICE OF INTENT TO CONSTRUCT **C-1**

APPENDIX D. FACILITY LOCATION AND AERIAL PHOTOGRAPH **D-1**

APPENDIX E. ZONING REQUIREMENT **E-1**

1. GENERAL INFORMATION

1.0 Executive Summary

This application is being submitted to modify a Construction Permit for the existing University of New Mexico Hospital's University Psychiatric Center permitted under ATC 1671. This facility is located at 2600 Marble Ave NE, Albuquerque, NM 87106. This facility consists of four building that compose the University Psychiatric Center: 299A Physician Access Line Service (PALS), 299B University Psychiatric Center Administration building 299B, 299C University Psychiatric Center Inpatient Building, and 299 Programs for Children and Adolescents. Following construction 299A/D will be replaced by the Behavioral Health Crisis Center (also known as Crisis Triage Center). 299B/C will remain in use.

The original emergency generator serviced 299A and will be demolished. The generator will be replaced with a 450-kW emergency generator and the unit will solely service the Behavioral Health Crisis Center (299E). The current boilers and water heaters located in 299B/C are exempt and will be replaced. These boilers and water heaters are updated in this permit modification. UNMH is planning on demolishing 299A/D and replacing the buildings with a Behavioral Crisis center 299E (also known as Crisis Triage Center). 299B/C will remain in use. UNMH is requesting to utilize the same permit and modifying this permit instead of requesting a new permit.

In accordance with 20.11.41.13.E NMAC, this application submittal includes all of the requirements set forth by the department including:
(1) Application Forms
(2) Owner and Operator's Name and Mailing Address
(3) Application Date
(4) Sufficient Attachments: Calculations, Potential Emission Rate, Nature of All Regulated Contaminants, Actual emissions,
(5) Operational and Maintenance Strategy
(6) Facility Map
(7) Aerial Photograph of proposed location
(8) Complete Description of all Sources of Regulated Air Contaminants and Process Flow Diagram
(9) Full Description of Air Pollution Control Equipment
(10) Description of Equipment or Methods used for emission measurement
(11) Maximum and Normal Operating Time Schedules of the Source
(12) Other Relevant Information
(13) Applicant Signature
(14) Accompanied by a Registration Fee
(15) Proof of Public Notice Requirements

Equipment to be authorized at this facility after issuance of the Construction Permit is detailed below:
- One (1) diesel-fired 450 kW Cummins DFEJ generator (Unit 1)

The uncontrolled emissions associated with the generator are based on 8760 hours of operation per year. The controlled emissions are controlled by reducing the hours of operation to 500 hours per year. These emissions are included in the department's application forms.

In accordance with 20.11.41.2.F(3) NMAC, the following equipment will be exempt:
- Two (2) natural gas fired 2.5 MMBtu/hr AERCO BMK 2500 Boilers (299B)
- One (1) natural gas fired 0.2 MMBtu/hr Ajax WGFD-1500 Boiler (299C)
- Three (3) natural gas fired 0.5 MMBtu/hr AO Smith BTH-500A-300 Water Heaters (299B)

- One (1) natural gas fired 0.2 MMBtu/hr State Industries SBD100199NED118 Water Heater (299C)
- One (1) natural gas fired 0.3 MMBtu/hr AO Smith BTHL-300A DWH-1 Water Heater (299E)
- Two (2) natural gas fired 0.961 MMBtu/hr Lochinvar FBN1001 Hydronic Boilers (299E)

2. DESCRIPTION OF FACILITY AND EMISSIONS INFORMATION

The following section summarizes the source of emissions, process description, methodology, and emission factors used to estimate air pollutant emissions from the facility.

2.1 Description of the Facility

The new backup generator's main function is to provide backup power to support operations in the event that primary power is interrupted. There are comparatively minor actual emissions from the infrequent and intermittent emergency backup operations inherent to this facility.

To comply with 40 CFR 60 Subpart IIII [New Source Performance Standards (NSPS) for Compression Ignition Stationary Reciprocating Internal Combustion Engines (RICE)] requirements, Unit 1 will be restricted to less than 100 hours of non-emergency operations annually and will be in compliance with EPA's Tier 2 Emission Standards.

2.2 Process Flow Sheets

N/A – There is no specific process for this facility as the only source at this facility is the generator which provides power in the event of a PNM outage. As such, a simple process flow diagram (PFD) is included in this permit modification application.

Emergency Generator Process Flow Diagram

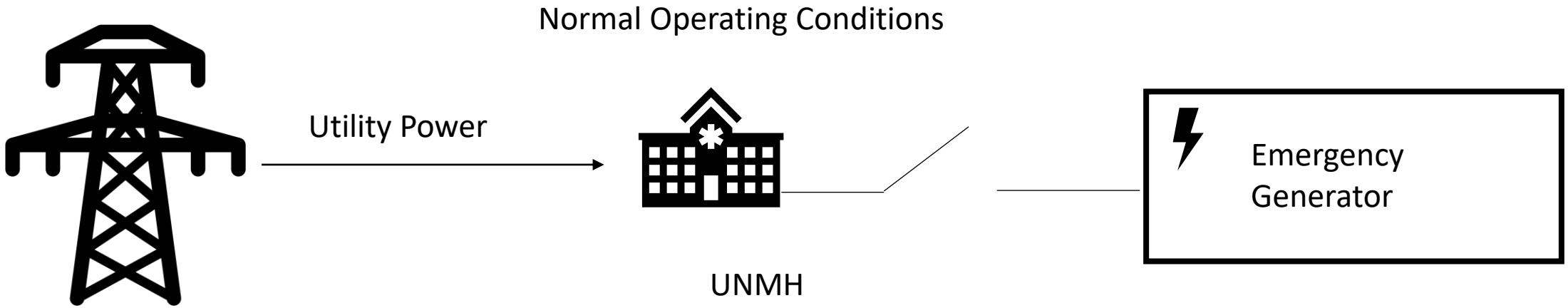

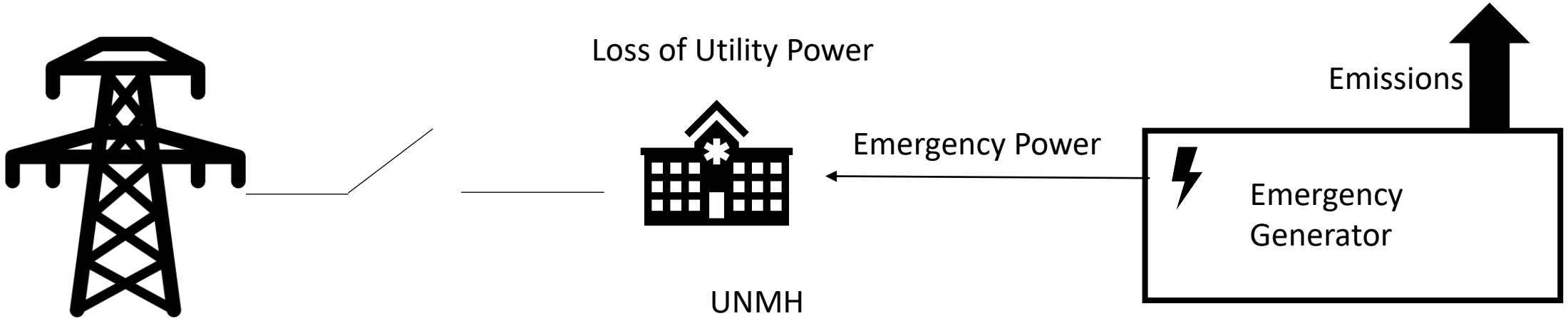

2.3 Air Pollutant Emissions and Calculation Methodology

2.3.1 Diesel Generator (Unit 1)

Emissions from the new generator are a result of the combustion of diesel fuel. NO_x, CO, VOC, and PM combustion emissions are compliant with NSPS IIII emission standards for compression ignition internal combustion engines (in compliance with EPA Tier 2 limits). SO_2 emissions for the generator are based on the AP-42 Table 3.3-1 emission factor for SO_X and the assumption that the unit fires ultra-low sulfur diesel (ULSD) with a maximum allowable sulfur content of 15 ppm. The emission factor in Table 3.3-1 is for SO_X, so the conservative assumption that all SO_X is SO_2 was made to estimate emissions. HAPs are based on AP-42 Table 3.3-2.

To calculate lb/hr emissions for NO_x, CO, VOC, and PM, the emission factor (g/kW-hr) was multiplied by the engine's standby rating and grams were converted to pounds. To calculate lb/hr emissions for SO_2, the emission factor (lb/hp-hr) was multiplied by the engine's maximum hp rating. For HAP emissions, the heat value of 137,000 Btu/gal (from AP-42 Appendix A) and the manufacturer-provided fuel usage of 27 gal/hr were used to calculate a maximum heat rate (MMBtu/hr) for the unit. This was then multiplied by the lb/MMBtu HAP emission factor from AP-42 Table 3.3-2 to calculate all HAP lb/hr emissions. To calculate the uncontrolled emission rate in tons per year, the lb/hr rate was multiplied by 8760 hr/yr and converted to tons (1 ton = 2,000 lb). The controlled emission rate in tons per year, the lb/hr rate was multiplied by 500 hr/yr and converted to tons (1 ton = 2,000 lb).

2.4 Emission Calculations

UNMH - University Psychiatric Center

Uncontrolled Emissions

Unit	Description	NO_X		CO		VOC		SO_2		PM_{10}		$PM_{2.5}$		HAP	
		lb/hr	tpy	lb/hr	tpy	lb/hr	tpy	lb/hr	tpy	lb/hr	tpy	lb/hr	tpy	lb/hr	tpy
1	Emergency Generator	6.03	26.42	3.47	15.21	0.32	1.39	1.55	6.78	0.20	0.87	0.20	0.87	0.058	0.25
Total		6.03	26.42	3.47	15.21	0.32	1.39	1.55	6.78	0.20	0.87	0.20	0.87	0.058	0.25

Controlled Emissions

Unit	Description	NO_X		CO		VOC		SO_2		PM_{10}		$PM_{2.5}$		HAP	
		lb/hr	tpy	lb/hr	tpy	lb/hr	tpy	lb/hr	tpy	lb/hr	tpy	lb/hr	tpy	lb/hr	tpy
1	Emergency Generator	6.03	1.51	3.47	0.87	0.32	0.079	1.55	0.39	0.20	0.050	0.20	0.050	0.058	0.015
Total		6.03	1.51	3.47	0.87	0.32	0.079	1.55	0.39	0.20	0.050	0.20	0.050	0.058	0.015

UNMH - University Psychiatric Center

Unit:	1	
Generator Make:	Cummins	
Generator Model:	DFEJ	
Engine Make:	Cummins	
Engine Model:	QSX15-G9	
Uncontrolled Annual Hours of Operation:	8760	hr/yr
Requested Hours of Operation:	500	
Generator Standby Rating:	450	kW
Engine Nameplate Horsepower:	755	hp
Maximum Fuel Flow:	112	gal/hr
Diesel Heat Value (AP-42):	137,000	Btu/gal
Engine Heat Input:	15.34	MMBtu/hr
Fuel:	Diesel	

Criteria Pollutant and VOC Emissions

Pollutant	Diesel Emission Factor (lb/hp-hr)	Diesel Emission Factor (g/kW-hr)	Potential Emissions (lb/hr)	Uncontrolled Emissions (tpy)	Controlled Emissions (tpy)	Emission Factor Source
NO_X[1]	-	6.08	6.03	26.42	1.51	EPA Tier 2 Emission Standards
CO		3.50	3.47	15.21	0.87	EPA Tier 2 Emission Standards
PM_{10}		0.20	0.198	0.87	0.05	EPA Tier 2 Emission Standards
$PM_{2.5}$		0.20	0.198	0.87	0.05	EPA Tier 2 Emission Standards
VOC[1]		0.32	0.317	1.39	0.08	EPA Tier 2 Emission Standards
SO_2	2.05E-03		1.548	6.78	0.39	AP-42 Table 3.3-1

[1] Based on California Air Resource Board (CARB) Guidance, NOx+ NMHC was assumed to be 95% NO_X and 5% NMHC.

HAP Emissions

Pollutant	Diesel Emission Factor (lb/MMBtu)	Potential Emissions (lb/hr)	Uncontrolled Emissions (tpy)	Controlled Emissions (tpy)	Emission Factor Source
Benzene	9.33E-04	1.43E-02	0.063	0.0036	AP-42 Table 3.3-2
Toluene	4.09E-04	6.28E-03	0.0275	0.0016	AP-42 Table 3.3-2
Xylenes	2.85E-04	4.37E-03	0.0192	0.0011	AP-42 Table 3.3-2
1,3-Butadiene	3.91E-05	6.00E-04	0.00263	0.00015	AP-42 Table 3.3-2
Formaldehyde	1.18E-03	1.81E-02	0.079	0.0045	AP-42 Table 3.3-2
Acetaldehyde	7.67E-04	1.18E-02	0.052	0.0029	AP-42 Table 3.3-2
Acrolein	9.25E-05	1.42E-03	0.0062	0.00035	AP-42 Table 3.3-2
Naphthalene	8.48E-05	1.30E-03	0.0057	0.00033	AP-42 Table 3.3-2
Total	**3.79E-03**	**0.0582**	**0.255**	**0.0145**	**-**

Exhaust Parameters		
Stack Height	10.00	ft
Exit Diameter	0.67	ft
Stack Area	0.349	ft^2
Exhaust Flow	3105.00	ft^3/min
Exhaust Flow	51.75	ft^3/s
Exit Velocity	148.25	ft/s
Temperature	865.00	°F

2.5 Supporting Information

AP-42 Tables 3.3-1, 3.3-2: Gasoline and Diesel Industrial Engines

Manufacturer Specifications for Cummins QSX15-G9 engine and Cummins DFEJ Generator

AP-42 Appendix A: Miscellaneous Data and Conversion Factors

Tier 2 Emission Standards for Stationary CI RICE

Manufacturer Specifications for AERCO BMK 2500 Boilers

Manufacturer Specifications for AO Smith BTH-500A-300 Water Heaters

Manufacturer Specification for State Industries SBD100199NED118

Manufacturer Specifications for AO Smith BTHL-300A Domestic Water Heater

Manufacturer Specifications for Lochinvar FBN1001 Boilers

Table 3.3-1. EMISSION FACTORS FOR UNCONTROLLED GASOLINE AND DIESEL INDUSTRIAL ENGINES[a]

Pollutant	Gasoline Fuel (SCC 2-02-003-01, 2-03-003-01)		Diesel Fuel (SCC 2-02-001-02, 2-03-001-01)		EMISSION FACTOR RATING
	Emission Factor (lb/hp-hr) (power output)	Emission Factor (lb/MMBtu) (fuel input)	Emission Factor (lb/hp-hr) (power output)	Emission Factor (lb/MMBtu) (fuel input)	
NO_x	0.011	1.63	0.031	4.41	D
CO	6.96 E-03[d]	0.99[d]	6.68 E-03	0.95	D
SO_x	5.91 E-04	0.084	2.05 E-03	0.29	D
PM-10[b]	7.21 E-04	0.10	2.20 E-03	0.31	D
CO_2[c]	1.08	154	1.15	164	B
Aldehydes	4.85 E-04	0.07	4.63 E-04	0.07	D
TOC					
Exhaust	0.015	2.10	2.47 E-03	0.35	D
Evaporative	6.61 E-04	0.09	0.00	0.00	E
Crankcase	4.85 E-03	0.69	4.41 E-05	0.01	E
Refueling	1.08 E-03	0.15	0.00	0.00	E

[a] References 2,5-6,9-14. When necessary, an average brake-specific fuel consumption (BSFC) of 7,000 Btu/hp-hr was used to convert from lb/MMBtu to lb/hp-hr. To convert from lb/hp-hr to kg/kw-hr, multiply by 0.608. To convert from lb/MMBtu to ng/J, multiply by 430. SCC = Source Classification Code. TOC = total organic compounds.

[b] PM-10 = particulate matter less than or equal to 10 µm aerodynamic diameter. All particulate is assumed to be ≤ 1 µm in size.

[c] Assumes 99% conversion of carbon in fuel to CO_2 with 87 weight % carbon in diesel, 86 weight % carbon in gasoline, average BSFC of 7,000 Btu/hp-hr, diesel heating value of 19,300 Btu/lb, and gasoline heating value of 20,300 Btu/lb.

[d] Instead of 0.439 lb/hp-hr (power output) and 62.7 lb/mmBtu (fuel input), the correct emissions factors values are 6.96 E-03 lb/hp-hr (power output) and 0.99 lb/mmBtu (fuel input), respectively. This is an editorial correction. March 24, 2009

Table 3.3-2. SPECIATED ORGANIC COMPOUND EMISSION FACTORS FOR UNCONTROLLED DIESEL ENGINES[a]

EMISSION FACTOR RATING: E

Pollutant	Emission Factor (Fuel Input) (lb/MMBtu)
Benzene[b]	9.33 E-04
Toluene[b]	4.09 E-04
Xylenes[b]	2.85 E-04
Propylene	2.58 E-03
1,3-Butadiene[b,c]	<3.91 E-05
Formaldehyde[b]	1.18 E-03
Acetaldehyde[b]	7.67 E-04
Acrolein[b]	<9.25 E-05
Polycyclic aromatic hydrocarbons (PAH)	
Naphthalene[b]	8.48 E-05
Acenaphthylene	<5.06 E-06
Acenaphthene	<1.42 E-06
Fluorene	2.92 E-05
Phenanthrene	2.94 E-05
Anthracene	1.87 E-06
Fluoranthene	7.61 E-06
Pyrene	4.78 E-06
Benzo(a)anthracene	1.68 E-06
Chrysene	3.53 E-07
Benzo(b)fluoranthene	<9.91 E-08
Benzo(k)fluoranthene	<1.55 E-07
Benzo(a)pyrene	<1.88 E-07
Indeno(1,2,3-cd)pyrene	<3.75 E-07
Dibenz(a,h)anthracene	<5.83 E-07
Benzo(g,h,l)perylene	<4.89 E-07
TOTAL PAH	1.68 E-04

[a] Based on the uncontrolled levels of 2 diesel engines from References 6-7. Source Classification Codes 2-02-001-02, 2-03-001-01. To convert from lb/MMBtu to ng/J, multiply by 430.
[b] Hazardous air pollutant listed in the *Clean Air Act*.
[c] Based on data from 1 engine.

Generator set data sheet

Model:	**DFEJ**
Frequency:	**60 Hz**
Fuel type:	**Diesel**
kW rating:	**450 Standby** **410 Prime**
Emissions level:	**EPA NSPS Stationary Emergency Tier 2**

Exhaust emission data sheet:	**EDS-184**
Exhaust emission compliance sheet:	**EPA-1025**
Sound performance data sheet:	**MSP-183**
Cooling performance data sheet:	**MCP-106**
Prototype test summary data sheet:	**PTS-145**
Standard set-mounted radiator cooling outline:	**0500-3326**
Optional set-mounted radiator cooling outline:	
Optional heat exchanger cooling outline:	
Optional remote radiator cooling outline:	

Fuel consumption	**Standby**				**Prime**				**Continuous**
	kW (kVA)				**kW (kVA)**				**kW (kVA)**
Ratings	450 (563)				410 (513)				
Load	**1/4**	**1/2**	**3/4**	**Full**	**1/4**	**1/2**	**3/4**	**Full**	**Full**
US gph	10.8	17.4	23.4	30.1	10.2	16.2	21.9	27.7	
L/hr	41	66	89	114	39	61	83	105	

Engine	**Standby rating**	**Prime rating**	**Continuous rating**
Engine manufacturer	Cummins Inc.		
Engine model	QSX15-G9		
Configuration	Cast iron with replaceable wet cylinder liners, In-Line 6 cylinder		
Aspiration	Turbocharged and air-to-air after-cooled		
Gross engine power output, kW_m (bhp)	563.0 (755.0)	507.3 (680.0)	
BMEP at set rated load, kPa (psi)	2192.5 (318.0)	2006.4 (291.0)	
Bore, mm (in.)	136.9 (5.39)		
Stroke, mm (in.)	168.9 (6.65)		
Rated speed, rpm	1800		
Piston speed, m/s (ft/min)	10.1 (1995.0)		
Compression ratio	17.0:1		
Lube oil capacity, L (qt)	83.3 (88.0)		
Overspeed limit, rpm	2150 ± 50		
Regenerative power, kW	52.00		

©2017 Cummins Inc. | D-3400 (10/17)

Fuel flow	Standby rating	Prime rating	Continuous rating
Maximum fuel flow, L/hr (US gph)	423.9 (112.0)		
Maximum fuel inlet restriction, mm Hg (in Hg)	127.0 (5.0)		
Maximum return restriction, mm Hg (in Hg)	165.1 (6.5)		

Air

Combustion air, m^3/min (scfm)	38.3 (1355.0)	36.8 (1300.0)	
Maximum air cleaner restriction, kPa (in H_2O)	6.2 (25.0)		
Alternator cooling air, m^3/min (cfm)	62.0 (2190.0)		

Exhaust

Exhaust flow at set rated load, m^3/min (cfm)	87.9 (3105.0)	82.4 (2910.0)	
Exhaust temperature, °C (°F)	462.8 (865.0)	440.6 (825.0)	
Maximum back pressure, kPa (in H_2O)	10.2 (41.0)		

Standard set-mounted radiator cooling

Ambient design, °C (°F)	40 (104)		
Fan load, kW_m (HP)	19 (25.5)		
Coolant capacity (with radiator), L (US gal)	57.9 (15.3)		
Cooling system air flow, m^3/min (scfm)	707.5 (25000.0)		
Total heat rejection, MJ/min (Btu/min)	19.6 (18485.0)	17.7 (16680.0)	
Maximum cooling air flow static restriction, kPa (in H_2O)	0.12 (0.5)		

Optional set-mounted radiator cooling

Ambient design, °C (°F)	50 (122)		
Fan load, kW_m (HP)	19 (25.5)		
Coolant capacity (with radiator), L (US gal)	57.9 (15.3)		
Cooling system air flow, m^3/min (scfm)	707.5 (25000.0)		
Total heat rejection, MJ/min (Btu/min)	19.6 (18485.0)	17.7 (16680.0)	
Maximum cooling air flow static restriction, kPa (in H_2O)	0.12 (0.5)		

©2017 Cummins Inc. | D-3400 (10/17)

Optional heat exchanger cooling	Standby rating	Prime rating	Continuous rating
Set coolant capacity, L (US gal)			
Heat rejected, jacket water circuit, MJ/min (Btu/min)			
Heat rejected, aftercooler circuit, MJ/min (Btu/min)			
Heat rejected, fuel circuit, MJ/min (Btu/min)			
Total heat radiated to room, MJ/min (Btu/min)			
Maximum raw water pressure, jacket water circuit, kPa (psi)			
Maximum raw water pressure, after-cooler circuit, kPa (psi)			
Maximum raw water pressure, fuel circuit, kPa (psi)			
Maximum raw water flow, jacket water circuit, L/min (US gal/min)			
Maximum raw water flow, aftercooler circuit, L/min (US gal/min)			
Maximum raw water flow, fuel circuit, L/min (US gal/min)			
Minimum raw water flow at 27 °C (80 °F) inlet temp, jacket water circuit, L/min (US gal/min)			
Minimum raw water flow at 27 °C (80 °F) inlet temp, after-cooler circuit, L/min (US gal/min)			
Minimum raw water flow at 27 °C (80 °F) inlet temp, fuel circuit, L/min (US gal/min)			
Raw water delta P at min flow, jacket water circuit, kPa (psi)			
Raw water delta P at min flow, aftercooler circuit, kPa (psi)			
Raw water delta P at min flow, fuel circuit, kPa (psi)			
Maximum jacket water outlet temp, °C (°F)			
Maximum after-cooler inlet temp, °C (°F)			
Maximum after-cooler inlet temp at 25 °C (77 °F) ambient, °C (°F)			
Maximum fuel return line restriction, kPa (in Hg)			

Optional remote radiator cooling[1]	
Set coolant capacity, L (US gal)	
Max flow rate at max friction head, jacket water circuit, L/min (US gal/min)	
Max flow rate at max friction head, aftercooler circuit, L/min (US gal/min)	
Heat rejected, jacket water circuit, MJ/min (Btu/min)	
Heat rejected, aftercooler circuit, MJ/min (Btu/min)	
Heat rejected, fuel circuit, MJ/min (Btu/min)	
Total heat radiated to room, MJ/min (Btu/min)	
Maximum friction head, jacket water circuit, kPa (psi)	
Maximum friction head, aftercooler circuit, kPa (psi)	
Maximum static head, jacket water circuit, m (ft)	
Maximum static head, aftercooler circuit, m (ft)	
Maximum jacket water outlet temp, °C (°F)	
Maximum aftercooler inlet temp at 25 °C (77 °F) ambient, °C (°F)	
Maximum aftercooler inlet temp, °C (°F)	
Maximum fuel flow, L/hr (US gph)	
Maximum fuel return line restriction, kPa (in Hg)	

©2017 Cummins Inc. | D-3400 (10/17)

Weights[2]

Unit dry weight kgs (lbs)	4098 (9035)
Unit wet weight kgs (lbs)	4234 (9335)

Notes:
[1] For non-standard remote installations contact your local Cummins representative.
[2] Weights represent a set with standard features. See outline drawing for weights of other configurations.

Derating factors

Standby	Genset may be operated up to 1740 m (5700 ft) and 40 °C (104 °F) without power deration. For sustained operation above these conditions up to 2220 m (7280 ft), derate by 2.8% per 305 m (1000 ft), and 5.7% per 10 °C (3.2% per 10 °F). Above 2220 m (7280 ft) up to 3000 m (9840 ft), derate 3.9% total for 2200 m (7280 ft) plus 4.3% per 305 m (1000 ft), and 5.7% per 10 °C (3.2% per 10 °F). Above 3000 m (9840 ft), derate 14.9% total for 3000 m (9840 ft) plus 1.8% per 305 m (1000 ft) and 10% per 10 °C (5.6% per 10°F).
Prime	Genset may be operated up to 1740 m (5700 ft) and 40 °C (104 °F) without power deration. For sustained operation above these conditions up to 2220 m (7280 ft), derate by 2.8% per 305 m (1000 ft), and 5.7% per 10 °C (3.2% per 10 °F). Above 2220 m (7280 ft) up to 3000 m (9840 ft), derate 3.9% total for 2200 m (7280 ft) plus 4.3% per 305 m (1000 ft), and 5.7% per 10 °C (3.2% per 10 °F). Above 3000 m (9840 ft), derate 14.9% total for 3000 m (9840 ft) plus 1.8% per 305 m (1000 ft) and 10% per 10 °C (5.6% per 10 °F).
Continuous	

Ratings definitions

Emergency Standby Power (ESP):	**Limited-Time Running Power (LTP):**	**Prime Power (PRP):**	**Base Load (Continuous) Power (COP):**
Applicable for supplying power to varying electrical load for the duration of power interruption of a reliable utility source. Emergency Standby Power (ESP) is in accordance with ISO 8528. Fuel stop power in accordance with ISO 3046, AS 2789, DIN 6271 and BS 5514.	Applicable for supplying power to a constant electrical load for limited hours. Limited-Time Running Power (LTP) is in accordance with ISO 8528.	Applicable for supplying power to varying electrical load for unlimited hours. Prime Power (PRP) is in accordance with ISO 8528. Ten percent overload capability is available in accordance with ISO 3046, AS 2789, DIN 6271 and BS 5514.	Applicable for supplying power continuously to a constant electrical load for unlimited hours. Continuous Power (COP) is in accordance with ISO 8528, ISO 3046, AS 2789, DIN 6271 and BS 5514.

©2017 Cummins Inc. | D-3400 (10/17)

Alternator data

Three phase table[1]		105 °C	105 °C	125 °C	125 °C	125 °C	125 °C	125 °C	150 °C	150 °C	150 °C	150 °C
Feature code		B259	B301	B258	B252	B414	B246	B300	B426	B413	B424	B419
Alternator data sheet number		308	306	307	306	307	305	305	307	306	305	305
Voltage ranges		110/190 thru 139/240 220/380 thru 277/480	347/600	110/190 thru 139/240 220/380 thru 277/480	120/208 thru 139/240 240/416 thru 277/480	120/208 thru 139/240 240/416 thru 277/480	277/480	347/600	110/190 thru 139/240 220/380 thru 277/480	120/208 thru 139/240 240/416 thru 277/480	277/480	347/600
Surge kW		515	516	513	512	515	513	511	513	512	513	511
Motor starting kVA (at 90% sustained voltage)	Shunt											
	PMG	2429	1896	2208	1896	2208	1749	1749	2208	1896	1749	1749

Full load current amps at Standby rating		110/190 1711	120/208 1563	110/220 1478	115/230 1414	139/240 1355	220/380 856	230/400 813	240/416 782	255/440 739	277/480 677	347/600 542

Notes:

[1] Single phase power can be taken from a three phase generator set at up to 2/3 set rated 3-phase kW at 1.0 power factor. Also see Note 3 below.

Formulas for calculating full load currents:

Three phase output

$$\frac{\text{kW} \times 1000}{\text{Voltage} \times 1.73 \times 0.8}$$

Single phase output

$$\frac{\text{kW} \times \text{SinglePhaseFactor} \times 1000}{\text{Voltage}}$$

Warning: Back feed to a utility system can cause electrocution and/or property damage. Do not connect to any building's electrical system except through an approved device or after building main switch is open.

For more information contact your local Cummins distributor or visit power.cummins.com

Our energy working for you.™

©2017 Cummins Inc. All rights reserved. Cummins is a registered trademark of Cummins Inc. PowerCommand, AmpSentry, InPower and "Our energy working for you." are trademarks of Cummins Inc. Other company, product, or service names may be trademarks or service marks of others. Specifications are subject to change without notice.
D-3400 (10/17)

APPENDIX A

MISCELLANEOUS DATA AND CONVERSION FACTORS

SOME USEFUL WEIGHTS AND MEASURES

Unit Of Measure	Equivalent	
grain	0.002	ounces
gram	0.04	ounces
ounce	28.35	grams
kilogram	2.21	pounds
pound	0.45	kilograms
pound (troy)	12	ounces
ton (short)	2000	pounds
ton (long)	2240	pounds
ton (metric)	2200	pounds
ton (shipping)	40	$feet^3$
centimeter	0.39	inches
inch	2.54	centimeters
foot	30.48	centimeters
meter	1.09	yards
yard	0.91	meters
mile	1.61	kilometers
$centimeter^2$	0.16	$inches^2$
$inch^2$	6.45	$centimeters^2$
$foot^2$	0.09	$meters^2$
$meter^2$	1.2	$yards^2$
$yard^2$	0.84	$meters^2$
$mile^2$	2.59	$kilometers^2$
$centimeter^3$	0.061	$inches^3$
$inch^3$	16.39	$centimeters^3$
$foot^3$	283.17	$centimeters^3$
$foot^3$	1728	$inches^3$

SOME USEFUL WEIGHTS AND MEASURES (cont.)

Unit Of Measure	Equivalent	
meter^3	1.31	yeads^3
yard^3	0.77	meters^3
cord	128	feet^3
cord	4	meters^3
peck	8	quarts
bushel (dry)	4	pecks
bushel	2150.4	inches^3
gallon (U. S.)	231	inches^3
barrel	31.5	gallons
hogshead	2	barrels
township	36	miles^2
hectare	2.5	acres

MISCELLANEOUS DATA

One cubic foot of anthracite coal weighs about 53 pounds.

One cubic foot of bituminous coal weighs from 47 to 50 pounds.

One ton of coal is equivalent to two cords of wood for steam purposes.

A gallon of water (U. S. Standard) weighs 8.33 pounds and contains 231 cubic inches.

There are 9 square feet of heating surface to each square foot of grate surface.

A cubic foot of water contains 7.5 gallons and 1728 cubic inches, and weighs 62.5 lbs.

Each nominal horsepower of a boiler requires 30 to 35 pounds of water per hour.

A horsepower is equivalent to raising 33,000 pounds one foot per minute, or 550 pounds one foot per second.

To find the pressure in pounds per square inch of a column of water, multiply the height of the column in feet by 0.434.

TYPICAL PARAMETERS OF VARIOUS FUELS[a]

Type Of Fuel	Heating Value		Sulfur % (by weight)	Ash % (by weight)
	kcal	Btu		
Solid Fuels				
Bituminous Coal	7,200/kg	13,000/lb	0.6-5.4	4-20
Anthracite Coal	6,810/kg	12,300/lb	0.5-1.0	7.0-16.0
Lignite (@ 35% moisture)	3,990/kg	7,200/lb	0.7	6.2
Wood (@ 40% moisture)	2,880/kg	5,200/lb	N	1-3
Bagasse (@ 50% moisture)	2,220/kg	4,000/lb	N	1-2
Bark (@ 50% moisture)	2,492/kg	4,500/lb	N	1-3[b]
Coke, Byproduct	7,380/kg	13,300/lb	0.5-1.0	0.5-5.0
Liquid Fuels				
Residual Oil	$9.98 \times 10^6/m^3$	150,000/gal	0.5-4.0	0.05-0.1
Distillate Oil	$9.30 \times 10^6/m^3$	140,000/gal	0.2-1.0	N
Diesel	$9.12 \times 10^6/m^3$	137,000/gal	0.4	N
Gasoline	$8.62 \times 10^6/m^3$	130,000/gal	0.03-0.04	N
Kerosene	$8.32 \times 10^6/m^3$	135,000/gal	0.02-0.05	N
Liquid Petroleum Gas	$6.25 \times 10^6/m^3$	94,000/gal	N	N
Gaseous Fuels				
Natural Gas	$9{,}341/m^3$	1,050/SCF	N	N
Coke Oven Gas	$5{,}249/m^3$	590/SCF	0.5-2.0	N
Blast Furnace Gas	$890/m^3$	100/SCF	N	N

[a] N = negligible.
[b] Ash content may be considerably higher when sand, dirt, etc., are present.

Nonroad Compression-Ignition Engines: Exhaust Emission Standards

	Rated Power (kW)	Tier	Model Year	NMHC (g/kW-hr)	NMHC + NOx (g/kW-hr)	NOx (g/kW-hr)	PM (g/kW-hr)	CO (g/kW-hr)	Smoke [a] (Percentage)	Useful Life (hours /years) [b]	Warranty Period (hours /years) [b]
Federal	kW < 8	1	2000-2004	-	10.5	-	1.0	8.0	20/15/50	3,000/5	1,500/2
		2	2005-2007	-	7.5	-	0.80	8.0			
		4	2008+	-	7.5	-	0.40 [c]	8.0			
	8 ≤ kW < 19	1	2000-2004	-	9.5	-	0.80	6.6		3,000/5	1,500/2
		2	2005-2007	-	7.5	-	0.80	6.6			
		4	2008+	-	7.5	-	0.40	6.6			
	19 ≤ kW < 37	1	1999-2003	-	9.5	-	0.80	5.5		5,000/7 [d]	3,000/5 [e]
		2	2004-2007	-	7.5	-	0.60	5.5			
		4	2008-2012	-	7.5	-	0.30	5.5			
			2013+	-	4.7	-	0.03	5.5			
	37 ≤ kW < 56	1	1998-2003	-	-	9.2	-	-		8,000/10	3,000/5
		2	2004-2007	-	7.5	-	0.40	5.0			
		3 [f]	2008-2011	-	4.7	-	0.40	5.0			
		4 (Option 1) [g]	2008-2012	-	4.7	-	0.30	5.0			
		4 (Option 2) [g]	2012	-	4.7	-	0.03	5.0			
		4	2013+	-	4.7	-	0.03	5.0			
	56 ≤ kW < 75	1	1998-2003	-	-	9.2	-	-			
		2	2004-2007	-	7.5	-	0.40	5.0			
		3	2008-2011	-	4.7	-	0.40	5.0			
		4	2012-2013 [h]	-	4.7	-	0.02	5.0			
			2014+ [i]	0.19	-	0.40	0.02	5.0			
	75 ≤ kW < 130	1	1997-2002	-	-	9.2	-	-			
		2	2003-2006	-	6.6	-	0.30	5.0			
		3	2007-2011	-	4.0	-	0.30	5.0			
		4	2012-2013 [h]	-	4.0	-	0.02	5.0			
			2014+	0.19	-	0.40	0.02	5.0			

Continued

	Rated Power (kW)	Tier	Model Year	NMHC (g/kW-hr)	NMHC + NOx (g/kW-hr	NOx (g/kW-hr	PM (g/kW-hr	CO (g/kW-hr)	Smoke [a] (Percentage)	Useful Life (hours /years) [b]	Warranty Period (hours /years) [b]
Federal	130 ≤ kW < 225	1	1996-2002	1.3 [j]	-	9.2	0.54	11.4	20/15/50	8,000/10	3,000/5
		2	2003-2005	-	6.6	-	0.20	3.5			
		3	2006-2010	-	4.0	-	0.20	3.5			
		4	2011-2013 [h]	-	4.0	-	0.02	3.5			
			2014+ [i]	0.19	-	0.40	0.02	3.5			
	225 ≤ kW < 450	1	1996-2000	1.3 [j]	-	9.2	0.54	11.4			
		2	2001-2005	-	6.4	-	0.20	3.5			
		3	2006-2010	-	4.0	-	0.20	3.5			
		4	2011-2013 [h]	-	4.0	-	0.02	3.5			
			2014+ [i]	0.19	-	0.40	0.02	3.5			
	450 ≤ kW < 560	1	1996-2001	1.3 [j]	-	9.2	0.54	11.4			
		2	2002-2005	-	6.4	-	0.20	3.5			
		3	2006-2010	-	4.0	-	0.20	3.5			
		4	2011-2013 [h]	-	4.0	-	0.02	3.5			
			2014+ [i]	0.19	-	0.40	0.02	3.5			
	560 ≤ kW < 900	1	2000-2005	1.3 [j]	-	9.2	0.54	11.4			
		2	2006-2010	-	6.4	-	0.20	3.5			
		4	2011-2014	0.40	-	3.5	0.10	3.5			
			2015+ [i]	0.19	-	3.5 [k]	0.04 [l]	3.5			
	kW > 900	1	2000-2005	1.3 [j]	-	9.2	0.54	11.4			
		2	2006-2010	-	6.4	-	0.20	3.5			
		4	2011-2014	0.40	-	3.5 [k]	0.10	3.5			
			2015+ [i]	0.19	-	3.5 [k]	0.04 [l]	3.5			

Notes on following page.

Technical Data Sheet

Benchmark 750-6000 with Edge Controller

High Efficiency Boilers

The AERCO Benchmark® (BMK) Water Boiler is designed for condensing application in any closed loop hydronic system. It delivers unmatched burner modulation to match energy input directly to fluctuating system. No other product packs as much capacity into such a small footprint that fits through a standard door and can be transported in a freight elevator.

Energy Efficient

To minimize emissions, the BMK Series is fitted with a low NOx burner whose emissions will meet the most stringent NOx and CO requirements. The fully modulating burner also maintains AERCO standards for energy efficiency, longevity, reliability and construction quality.

The BMK Series comes standard with AERCO's TComp™ O_2/air temperature compensation (a standard combustion control feature available with BMK boilers for 15+ years) provides precise combustion and maintains O_2 levels throughout the year for best combustion efficiency.

Application and Plant Design

The BMK boilers can be used as an individual unit or in modular arrangements and offers selectable modes of operation. In addition to controlling the boiler according to a constant set point, indoor/outdoor reset schedule or 4-20mA signal, one or more units can be integrated via Modbus communications protocol. For boiler plants ranging from 2-16 boilers, the AERCO Edge® built-in Boiler Sequencing Technology (BST)* can be utilized. The Benchmark can be easily integrated with a facility-wide Energy Management or Building Automation System.

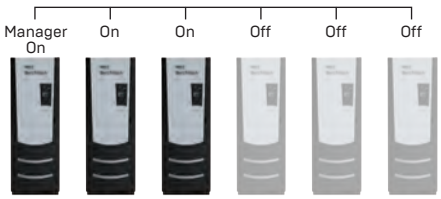

*See BST System technical data sheet for additional system details and capabilities

Features

- Natural gas, propane, or dual fuel
- 20:1 turndown ratio (5%) depending on capacity
- TComp™ (O_2/air temperature compensation)
- 439 stainless steel fire tube heat exchanger
- Capable of variable primary flow Installations
- NOx emissions capable of 9PPM or less @ all firing rates *depending on capacity
- Compact footprint, light weight, freight elevator friendly
- Ducted combustion air capable
- Easy open access for service
- Acceptable vent materials AL29-4C, Polypropylene, PVC, cPVC (model dependent)
- Reliable quiet operation
- Optional gas train with VPS (Value Proving System) for BMK Platinum 4000/5000/6000

Edge [i]

- Precise temperature control
- On-board Boiler Sequencing Technology (BST)
- Controls options: constant setpoint, indoor/outdoor reset, remote setpoint, 4-20mA signal or ModBus

Specifications

	BMK									
	750	1000	1500	2000	2500	3000	4000	5000N	5000[4]	6000[4]
Boiler Category	ASME Sect.IV									
Gas Connections (NPT)	1”		2”				3”		2 / 3”	
Max. Gas Pressure	14”								2psi/10”[4]	
Min. Gas Pressure [1]	4”								14 / 4”[4]	
Max. Allowed Working Pressure	160 PSIG								80PSIG/150 PSIG Optional	
Electrical Req. 120V/1PH/60Hz [2]	13 FLA		16 FLA		N/A					
Electrical Req. 208V/3PH/60Hz [2]	N/A				10 FLA		23 FLA		19 FLA	
Electrical Req. 460V/3PH/60Hz [2]	N/A				5 FLA		12 FLA		9 FLA	
Electrical Req. 575V/3PH/60Hz [2]	N/A				N/A		N/A		7 FLA	
Water Connect. (Flanged)	3”		4”				6”		6”	
Min. Water Flow (GPM)	12		25				35		75	
Max. Water Flow (GPM)	175		250	350			500		600	
Water Volume Gallons	16.25	14.25	44	40	58	55	75		110	
Water Pressure Drop	3.0 PSIG @100 GPM		3.0 PSIG @170 GPM		3.0 PSIG @218 GPM	3.0 PSIG @261 GPM	5.0 PSIG @475 GPM		4.0 PSIG @500 GPM	
Turndown Ratio	15:1 (7%)	20:1 (5%)		20:1 (5%)	15:1 (7%)	15:1 (7%)	15:1 (7%)	20:1 (7%)	12:1 (8%)	15:1 (7%)
Vent/Air Intake Connections	6 Inch			8 Inch			12 Inch Vent/10 Inch Air Intake		14 Inch/12 Inch Optional Flue Venting	
Vent Materials	AL29-4C Polypro, CPVC, PVC		AL29-4C Polypro							
Type of Gas	Natural Gas, Propane, Dual Fuel									
NOx Emissions <9ppm Capability[3]	✓		✓		<l3 ppm		✓		✓	
Temp. Control Range	50ºF to 190ºF									
Ambient Temp. Range	0ºF to 130ºF									
Standard Listings & Approvals	UL, CUL, CSD-1, ASME									
Gas Train Operations	FM Compliant or Factory Installed DBB (IRI)						FM Compliant or Factory Installed DBB (IRI), VPS (Value Proving System)		FM Compliant, VPS (Value Proving System)	
Sound Rating dbA	65	65	70	70	72	72	75		79	
Weight (dry) lbs.	669	700	1406	1500	2,000	2,170	2200		3,000	
Shipping Weight lbs.	862	900	1606	1700	2,200	2,300	2350		3,800	

1. Values are for natural gas FM compliant gas trains only. See Benchmark Gas Components & Supply Design Guide GF-2030 for propane, DBB & dual fuel gas train minimum gas pressure requirements.
2. See Benchmark Electrical Power Guide GF-2060 for Service Disconnect Switch amperage requirements.
3. 9 PPM NOx emissions based on natural gas firing only. BMK5000/6000 operating at standard gas pressure (>14” W.C.) can achieve 9 ppm NOx. 14” ø flue required.
4. BMK5000/6000 low gas pressure option is available as a different style number. It operates between 4” and 10” of gas pressure.

Ratings

BMK	Min Input MBH	Max Input MBH	Max Output[1] MBH	Efficiency Range	Thermal Efficiency 80° to 180°F
750	50	750	653-720	87%-98%	95.6%
1000	50	1000	870-960	87%-98%	96.8%
1500	75	1500	1305-1440	87%-98%	94.6%
2000	100	2000	1740-1920	87%-98%	94.6%
2500	167	2500	2175-2400	87%-98%	93.5%
3000	200	3000	2610-2880	87%-98%	94.6%
4000	267	4000	3480-3840	87%-98%	94.1%
5000N	250	4990	4341-4790	87%-98%	93.8%
5000	400	5000	4350-4800	87%-98%	94.8%
6000	400	6000	5220-5760	87%-98%	94.5%

[1]Max output dependent upon application – see efficiency curves

Dimensions

750-4000

Dim: Inches

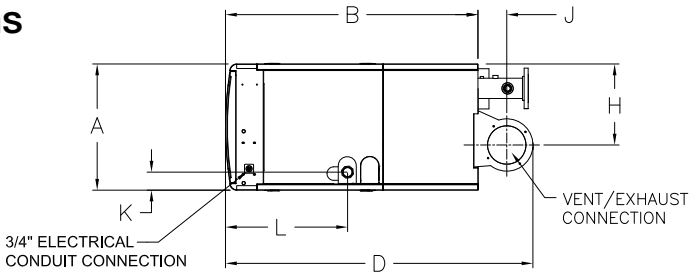

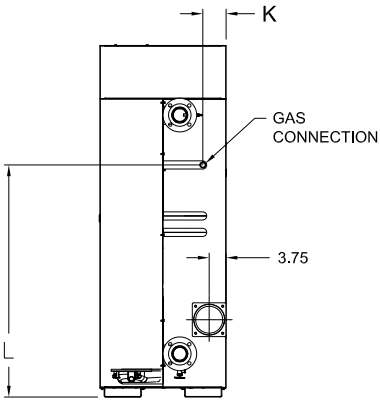

BMK750-1000

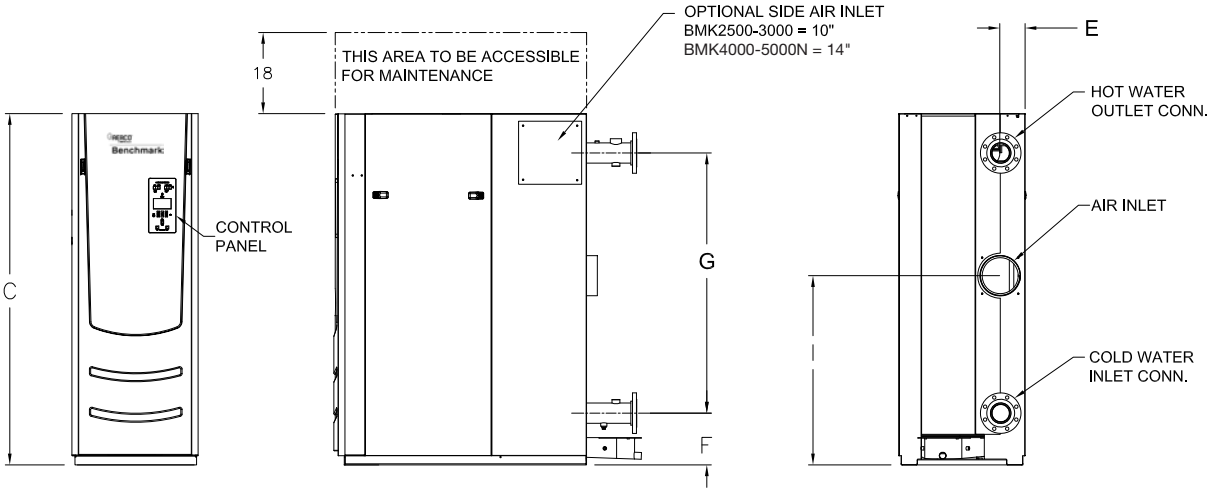

BMK Models	(Width) A	(Depth) B	(Height) C	D	E	F	G	H	I	J	K	L
750	28”	24.5”	78”	34”	10.2”	9.6”	53”	21”	17.1”	4.5’	5.1”	51.5”
1000	28”	25”	78”	34”	10.2”	9.6”	53”	21”	17.1”	4.5”	5.1”	51.5”
1500	28”	43.6”	78”	58.4”	6.6”	11.5”	57.8”	18”	42”	8.9”	4.4”	19.1”
2000	28”	43.6”	78”	58.4”	7”	11.5”	57.8”	18”	42”	8.9”	4.4”	19.1”
2500	28”	56”	78”	68.4”	5.6”	11.5”	57.8”	18”	42”	6.4”	4.4”’	27.1”
3000	28”	56”	78”	68.4”	5.6”	11.5”	57.8”	18”	42”	6.4”	4.4”’	27.1”’
4000	34”	63.5”	78.2”	80.6”	6”	12.4”	56”	21.4”	44.4”	9”	5.5”	28.7”
5000N	34”	63.5”	78.2”	80.6”	6”	12.4”	56”	21.4”	44.4”	9”	5.5”	28.7”

Dimensions

5000/6000

Dim: Inches

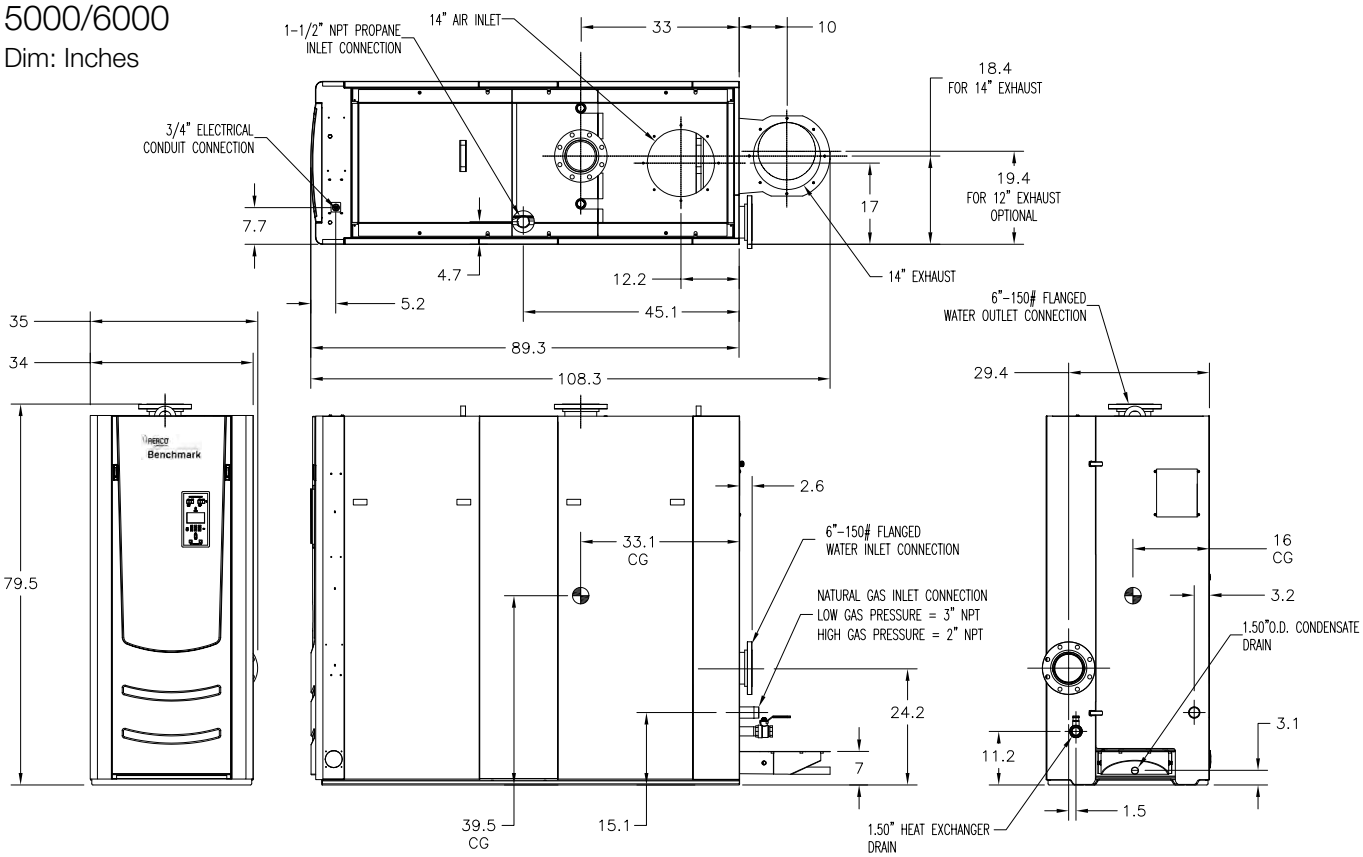

BMK Models	(Width) A	(Depth) B	(Height) C
5000	35”	89.3”	79.8”
6000	35”	89.3”	79.8”

AERCO®
A WATTS Brand

Heating and Hot Water Solutions

AERCO International, Inc. • 100 Oritani Drive • Blauvelt, NY 10913
USA: T: (845) 580-8000 • Toll Free: (800) 526-0288 • AERCO.com

© 2021 AERCO

Commercial Gas Water Heaters

CYCLONE® Mxi MODULATING

MODULATING BURNER ADVANCES THE CYCLONE TO HIGHER LEVELS OF EFFICIENCY

The full line of A. O. Smith Cyclone Mxi condensing water heaters has been designed to provide years of dependable service and feature industry leading technology. Models are available from 120,000 to 500,000 Btu/h and all deliver thermal efficiencies of 95% and higher. The unique helical coil heat exchanger limits weld joints for optimal service life while maximizing heat transfer.

Cyclone is the industry leader in high efficiency commercial water heating. The current Mxi modulating models adjust firing rate to the specific demand further increasing efficiency and money savings.

INTELLIGENT CONTROL SYSTEM WITH TOUCH SCREEN DISPLAY AND ICOMM CONNECTIVETY ONBOARD*

- Exclusive A. O. Smith designed color touch display control system
- Provides detailed water heater status information
- Precise temperature control adjustable from 90 to 180 degrees
- Built-in diagnostics
- Run history information
- *Cyclone Mxi models manufactured March 1, 2018 to present come standard with iCOMM Wi-Fi connectivety onboard. Remotely monitor and adjust the water heater via the A. O. Smith app. No charge connectivety using Wi-Fi or Ethernet connection.
- Intelligent Demand Response (IDR) feature senses large water draws and automatically adjusts the differential setpoint. This feature increases the hot water available when it is needed the most.

SUBMERGED COMBUSTION CHAMBER, WITH HELICAL HEAT EXCHANGER COIL

- Positioned in center of tank, surrounded by water to virtually eliminate radiant heat loss from chamber
- Direct spark ignition
- Spiral heat exchanger keeps hot burner gases swirling, uses centrifugal force to maximize efficiency of heat transfer to water in tank
- Spiral heat exchanger reduces lime scale from forming on water-side surfaces, which maintains energy efficiency over time

POWERED ANODES STANDARD ON ALL MODELS

- Provides long-lasting tank protection in varying water conditions
- Powered anodes are non-sacrificial
- Automatically adjusts output needed to properly protect the tank

PERMAGLAS® ULTRA COAT™ GLASS LINING

- Glass coating is applied using a liquid slush coating technique to ensure uniform coating
- Heat exchanger coil is glassed both externally and internally for optimum protection

MECHANICAL VENTING VERSATILITY

- Conventional power venting or direct venting
- Vents vertically or through a sidewall
- Front located exhaust and condensate connections allow for easy install and access
- Vents with low cost PVC Schedule 40 intake and exhaust pipe. Approved for optional CPVC Schedule 40, Polypropylene and AL29-4C stainless steel vent materials
- Direct-vent intake and exhaust pipe can terminate separately outside building or through single opening, using concentric vent assembly
- Canadian installations require ULC S636 PVC/CPVC, ULC S636 Polypropylene and AL29-4C stainless steel pipe for intake and exhaust

HIGH EFFICIENCY MODULATING PRE-MIX POWERED BURNER

- Down-fired pre-mix burner provides optimum efficiency and quiet operation
- Top-mounted burner position prevents condensation from affecting burner operation

3-YEAR LIMITED TANK / 1-YEAR LIMITED PARTS WARRANTY

- For complete warranty information, consult written warranty or go to hotwater.com

BTH-120(A) THROUGH BTH-500(A)
MODEL SHOWN:
BTH-199(A) SERIES 300/301

Low Lead Content · ENERGY STAR · CERTIFIED UL WATER QUALITY · ASME HLW · GAS-FIRED c UL us LISTED · iCOMM · AHRI CERTIFIED® www.ahridirectory.org · ASME (Optional)

©September 2020 | A. O. Smith Corporation. All Rights Reserved

www.hotwater.com | 800-527-1953 Toll-Free USA | A. O. Smith Corporation | 500 Tennessee Waltz Parkway | Ashland City, TN 37015

OTHER FEATURES:

SPACE-SAVING DESIGN FOR INSTALLATION FLEXIBILITY

- Easy-to-remove top cover for convenient access to serviceable parts
- 0″ installation clearances on sides and rear, 1-1/2″ installation clearance on top
- Handhole cleanout allows easy access to tank interior for cleaning
- 0″ clearance to combustibles, approved for installation on combustible floors

CODES AND STANDARDS

- CSA certified and ASME rated T&P relief valve
- Maximum hydrostatic working pressure: 160 psi
- All models are design certified by Underwriters Laboratories (UL), Inc., to ANSI Z21.10.3 - CSA 4.3 Standards
- Meets the thermal efficiency and standby loss requirements of the U.S. Department of Energy and current edition ASHRAE/IES 90.1
- Design Certified by Underwriters Laboratories to NSF standard 5 for 180°F (62°C) water
- Complies with SCAQMD Rule 1146.2 and other Air Quality Management Districts with similar requirements for ultra low-NOx emissions
- ASME tank construction optional on 120-500 model sizes

VENT REQUIREMENTS FOR BTH 120(A) - 250(A)

Number of 90° Elbows Installed	3 Inch Pipe	4 Inch Pipe
	Maximum Feet (Meters)	Maximum Feet (Meters)
One (1)	45 feet (13.7 meters)	115 feet (35 meters)
Two (2)	40 feet (12.2 meters)	110 feet (33.5 meters)
Three (3)	35 feet (10.7 meters)	105 feet (32 meters)
Four (4)	30 feet (9.1 meters)	100 feet (30.5 meters)
Five (5)	N/A	95 feet (29 meters)
Six (6)	N/A	90 feet (27.4 meters)

VENT REQUIREMENTS FOR BTH 300(A) - 500(A)

Number of 90° Elbows Installed	4 Inch Pipe	6 Inch Pipe
	Maximum Feet (Meters)	Maximum Feet (Meters)
One (1)	65 feet (19.8 meters)	115 feet (35 meters)
Two (2)	60 feet (18.2 meters)	110 feet (33.5 meters)
Three (3)	55 feet (16.8 meters)	105 feet (32 meters)
Four (4)	50 feet (15.2 meters)	100 feet (30.5 meters)
Five (5)	45 feet (13.7 meters)	95 feet (29 meters)
Six (6)	40 feet (12.2 meters)	90 feet (27.4 meters)

GAS PRESSURE REQUIREMENTS

Model Number	Manifold Pressure		Minimum Supply Pressure		Maximum Supply Pressure	
	Natural Gas	Propane Gas	Natural Gas	Propane Gas	Natural Gas	Propane Gas
BTH-120(A)	0"W.C. (0 kPa)	0"W.C. (0 kPa)	3.5"W.C. (1.10 kPa)	8.5"W.C. (2.12 kPa)	14"W.C. (3.49 kPa)	14"W.C. (3.49 kPa)
BTH-150(A)	0"W.C. (0 kPa)	0"W.C. (0 kPa)	3.5"W.C. (1.10 kPa)	8.5"W.C. (2.12 kPa)	14"W.C. (3.49 kPa)	14"W.C. (3.49 kPa)
BTH-199(A)	0"W.C. (0 kPa)	0"W.C. (0 kPa)	3.5"W.C. (1.10 kPa)	8.5"W.C. (2.12 kPa)	14"W.C. (3.49 kPa)	14"W.C. (3.49 kPa)
BTH-250(A)	0"W.C. (0 kPa)	0"W.C. (0 kPa)	3.5"W.C. (1.10 kPa)	8.5"W.C. (2.12 kPa)	14"W.C. (3.49 kPa)	14"W.C. (3.49 kPa)
BTH-300(A)	0"W.C. (0 kPa)	0"W.C. (0 kPa)	4.8"W.C. (1.19 kPa)	8.5"W.C. (2.12 kPa)	14"W.C. (3.49 kPa)	14"W.C. (3.49 kPa)
BTH-400(A)	0"W.C. (0 kPa)	0"W.C. (0 kPa)	4.8"W.C. (1.19 kPa)	8.5"W.C. (2.12 kPa)	14"W.C. (3.49 kPa)	14"W.C. (3.49 kPa)
BTH-500(A)	0"W.C. (0 kPa)	0"W.C. (0 kPa)	4.8"W.C. (1.19 kPa)	8.5"W.C. (2.12 kPa)	14"W.C. (3.49 kPa)	14"W.C. (3.49 kPa)

Depending on the installed equivalent length, and/or the number of appliances connected, the supply gas line size may need to be increased beyond the minimum required size.

Commercial Gas Water Heaters

BTH 120-250

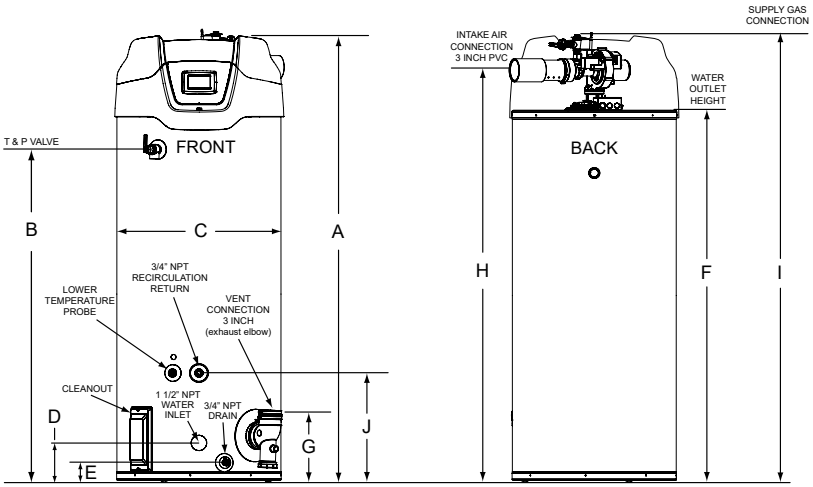

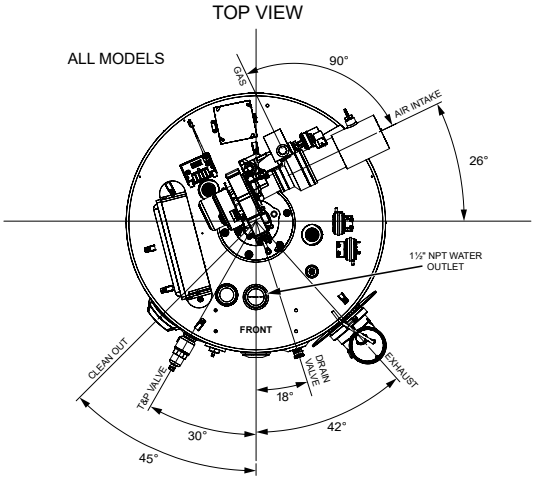

* Center line of water outlet on top of the water heaters is approximately 7 inches from the front edge of the water heater

Model Number	Approx. Capacity		Dimensions										lb/kg	Approx. Shipping Weight Std	Approx. Shipping Weight ASME
			A	B	C	D	E	F	G	H	I	J			
BTH-120(A)	Gallons	60	55 1/2	35	27 3/4	6 5/16	3	42 1/4	11 1/4	48 1/2	53 1/2	18 1/4	lb	460	490
	Liters	227	141	88.9	70.5	16	7.62	107.32	28.6	123.2	135.9	46.36	kg	208	220
BTH-150(A)	Gallons	100	76 1/2	56 3/8	27 3/4	6 5/16	3	64	11 1/4	70	75 1/2	18 1/4	lb	523	553
	Liters	379	194.9	143.2	70.5	16	7.62	162.6	28.6	177.8	191.8	46.36	kg	237	251
BTH-199(A)	Gallons	100	76 1/2	56 3/8	27 3/4	6 5/16	3	64	11 1/4	70	75 1/2	18 1/4	lb	523	553
	Liters	379	194.9	143.2	70.5	16	7.62	162.6	28.6	177.8	191.8	46.36	kg	237	251
BTH-250(A)	Gallons	100	76 1/2	56 3/8	27 3/4	6 5/16	3	64	11 1/4	70	75 1/2	18 1/4	lb	523	553
	Liters	379	194.9	143.2	70.5	16	7.62	162.6	28.6	177.8	191.8	46.36	kg	237	251

Electrical characteristics-120V-60Hz A.C., 5.0 A
"A" in model represents ASME construction
Propane gas models available
Dimensions and specifications subject to change without notice in accordance with our policy of continuous product improvement.

Commercial Gas Water Heaters

BTH 300-500

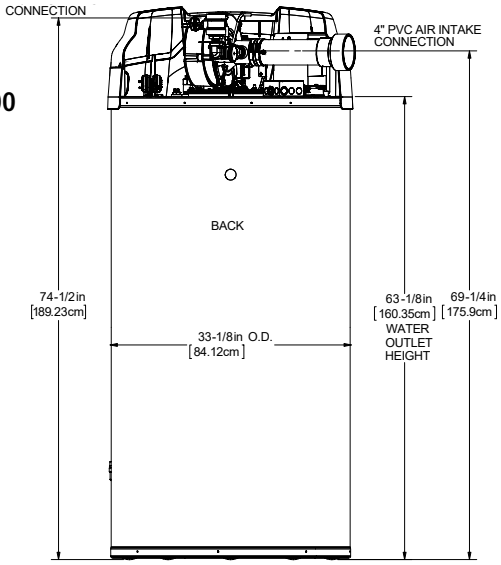

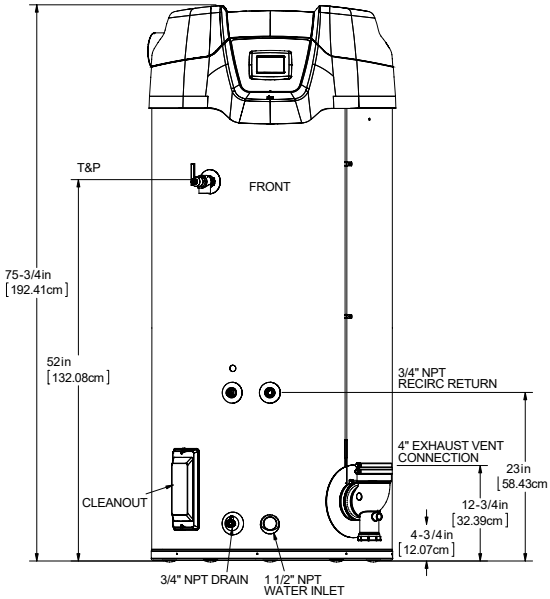

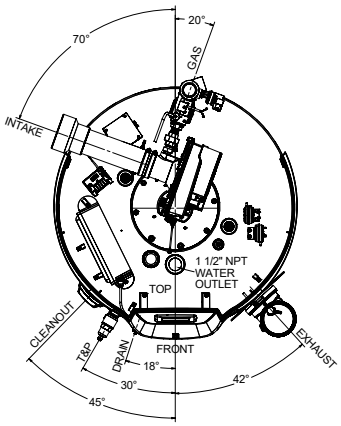

Model Number	Approx. Capacity		Dimensions										lb/kg	Approx. Shipping Weight Std	Approx. Shipping Weight ASME
			A	B	C	D	E	F	G	H	I	J			
BTH-300(A)	Gallons	119	75 3/4	52	33 1/8	4 3/4	4 3/4	63 1/8	12 3/4	69 1/4	74 1/2	23	lb	855	855
	Liters	450.96	192.41	132.08	84.12	12.07	12.07	160.35	32.39	175.9	189.23	58.43	kg	387	387
BTH-400(A)	Gallons	119	75 3/4	52	33 1/8	4 3/4	4 3/4	63 1/8	12 3/4	69 1/4	74 1/2	23	lb	855	855
	Liters	450.96	192.41	132.08	84.12	12.07	12.07	160.35	32.39	175.9	189.23	58.43	kg	387	387
BTH-500(A)	Gallons	119	75 3/4	52	33 1/8	4 3/4	4 3/4	63 1/8	12 3/4	69 1/4	74 1/2	23	lb	855	855
	Liters	450.96	192.41	132.08	84.12	12.07	12.07	160.35	32.39	175.9	189.23	58.43	kg	387	387

Electrical characteristics-120V-60Hz A.C., 5.0 A
"A" in model represents ASME construction
Propane gas models available
Dimensions and specifications subject to change without notice in accordance with our policy of continuous product improvement.

RECOVERY CAPACITY

Model Number	Type of Gas	Input		Thermal Efficiency
		BTU/HR	kW	
BTH-120(A)	Natural/Propane	120,000	35	95%
BTH-150(A)	Natural/Propane	150,000	44	98%
BTH-199(A)	Natural/Propane	199,900	58	97%
BTH-250(A)	Natural/Propane	250,000	73	96%
BTH-300(A)	Natural/Propane	300,000	88	96%
BTH-400(A)	Natural/Propane	399,900	117	95%
BTH-500(A)	Natural/Propane	499,900	146	95%

Model Number	U.S. GALLONS/HR AND LITRES/HR AT TEMPERATURE RISE INDICTATED													
	Approx. Capacity	°F	30°F	40°F	50°F	60°F	70°F	80°F	90°F	100°F	110°F	120°F	130°F	140°F
		°C	17°C	22°C	28°C	33°C	39°C	44°C	50°C	56°C	61°C	67°C	72°C	78°C
BTH-120(A)	60 U.S. Gals.	GPH	461	345	276	230	197	173	154	138	126	115	106	99
	227 Litres	LPH	1743	1308	1046	872	747	654	581	523	475	436	402	374
BTH-150(A)	100 U.S. Gals.	GPH	594	445	356	297	255	223	198	178	162	148	137	127
	379 Litres	LPH	2248	1686	1349	1124	963	843	749	674	613	562	519	482
BTH-199(A)	100 U.S. Gals.	GPH	783	588	470	392	336	294	261	235	214	196	181	168
	379 Litres	LPH	2965	2224	1779	1483	1271	1112	988	890	809	741	684	635
BTH-250(A)	100 U.S. Gals.	GPH	970	727	582	485	416	364	323	291	264	242	224	208
	379 Litres	LPH	3670	2753	2202	1835	1573	1376	1223	1101	1001	918	847	786
BTH-300(A)	119 U.S. Gals.	GPH	1164	873	698	582	499	436	388	349	317	291	269	249
	450.96 Litres	LPH	4405	3304	2643	2202	1888	1652	1468	1321	1201	1101	1017	944
BTH-400(A)	119 U.S. Gals.	GPH	1535	1151	921	767	658	576	512	460	419	384	354	329
	450.96 Litres	LPH	5810	4358	3486	2905	2490	2179	1937	1743	1585	1453	1341	1245
BTH-500(A)	119 U.S. Gals.	GPH	1919	1439	1151	959	822	720	640	576	523	480	443	411
	450.96 Litres	LPH	7263	5448	4358	3632	3113	2724	2421	2179	1981	1816	1676	1556

Recovery capacities are based on AHRI rated thermal efficiencies.
For ASME Construction add an "A" to the end of the model number ex: BTH-120A.

STORAGE CAPACITY

Model Number	U.S. Gallons	Liters
BTH 120	60	227
BTH 150	100	379
BTH 199	100	379
BTH 250	100	379
BTH 300	119	450.96
BTH 400	119	450.96
BTH 500	119	450.96

GAS LINE CONNECTION SIZE

Model	Series	Natural Gas	Propane Gas
BTH 120	300/301	3/4" NPT	3/4" NPT
BTH 150	300/301	3/4" NPT	3/4" NPT
BTH 199	300/301	3/4" NPT	3/4" NPT
BTH 250	300/301	3/4" NPT	3/4" NPT
BTH 300	300/301	1-1/2" NPT	1-1/2" NPT
BTH 400	300/301	1-1/2" NPT	1-1/2" NPT
BTH 500	300/301	1-1/2" NPT	1-1/2" NPT

OPTIONAL KITS

OPTIONAL CONCENTRIC VENT KITS

- BTH-120 - 250 vent kit p/n 100111100
- BTH-300 - 500 vent kit p/n 100113124

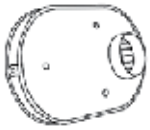

OPTIONAL LOW PROFILE TERMINATION VENT KITS

- 3″ Flush Mount Vent Kit p/n 100187887
- 4″ Flush Mount Vent Kit p/n 100187888
- 6″ Flush Mount Vent Kit p/n 100187889

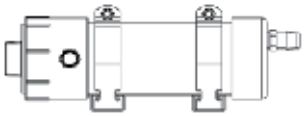

OPTIONAL CONDENSATE NEUTRALIZATION KITS

- BTH-120-300 kit p/n 100289339
- BTH-400-500 kit p/n 100289340

COMMON VENTING KITS FOR UP TO 3 WATER HEATERS (ONE KIT PER WATER HEATER REQUIRED)

Kit	Description
100227396	PVC Common Vent Kit, 120 – 250 Models
100223775	PVC Common Vent Kit, 300 – 500 Models
100227395	Polypropylene Common Vent Kit, 120 -250 Models
100223774	Polypropylene Common Vent Kit, 300 - 500 Models

Installations must comply with all national, state and local codes.
See kit instructions and corresponding water heater manual for detailed installation instructions and additional information.
50 Feet maximum equivalent length of straight pipe common vent and elbows
NOTE: Order 1 kit for each water heater.
See the Common Vent Kit manual or spec sheet for detailed information.

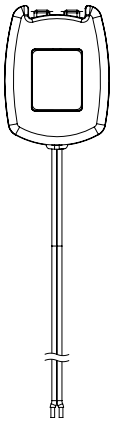

OPTIONAL LEAK DETECTION KIT

- BTH-120 - 500 kit p/n 100302557

SPECIFICATION

(Natural or Propane) gas water heater(s) shall be A. O. Smith Cyclone Mxi model # _____ or equal, minimum 95% thermal efficiency, a storage capacity of _____ gallons, an input rating of _____ BTUs per hour, a recovery rating of _____ gallons per hour (gph) at 100°F rise and a maximum hydrostatic working pressure of 160 psi. Water heater(s) shall: 1. Modulating gas burner that automatically adjusts the input based on demand. 2. Powered anodes that are non sacrificial and maintenance free. 3. Have seamless glass-lined steel tank construction, with glass lining applied to all water-side surfaces after the tank has been assembled and welded; 4. Meets the thermal efficiency and/or standby loss requirements of the U. S. Department of Energy and current edition of ASHRAE/IES 90.1; 5. Have foam insulation and a CSA Certified and ASME rated T&P relief valve; 6. Have a down-fired power burner designed for precise mixing of air and gas for optimum efficiency, requiring no special calibration on start-up; 7. Be approved for 0″ clearance to combustibles.

The control shall be an integrated solid-state temperature and ignition control device with integral diagnostics, graphic user interface, fault history display, and shall have digital temperature readout. No charge connectivety shall be provided allowing for remote viewing and fault notificaion via app. 1. All models are design certified by Underwriters Laboratories (UL), Inc., according to ANSI Z21.10.3 - CSA 4.3 standards governing storage type water heaters; 2. Meet the thermal efficiency and standby loss requirements of the U. S. Department of Energy and current edition ASHRAE/IES 90.1. Complies with SCAQMD Rule 1146.2 and other air quality management districts with similar requirements for low NOx emissions.

120K-250K BTU Input: For Standard Power Venting: Water heater(s) shall be suitable for power venting using a (3″ or 4″) _____ diameter PVC pipe for a total distance of (50 ft or 120 ft.) _____ equivalent feet of vent piping. For Power Direct Venting: Water heater(s) shall be suitable for power direct venting using a (3″ or 4″) _____ diameter PVC pipe for a total distance of (50 ft or 120 ft.) _____ equivalent feet of vent piping and (50 ft. or 120 ft.)_____ equivalent feet of intake air piping.

300K - 500K BTU Input: For Standard Power Venting: Water heater(s) shall be suitable for standard power venting using a (4″ or 6″)_____ diameter PVC pipe for a total distance of (70 ft. or 120 ft.)_____ equivalent feet of vent piping. For Power Direct Venting: Water heater(s) shall be suitable for power direct venting using a (4″ or 6″) _____ diameter PVC pipe for a total distance of (70 ft or 120 ft.) _____ equivalent feet of vent piping and (70 ft. or 120 ft.)_____ equivalent feet of intake air piping.

Operation of the water heater(s) in a closed system where thermal expansion has not been compensated for (with a properly sized thermal expansion tank) will void the warranty.

For Technical Information, call 800-527-1953. A. O. Smith Corporation reserves the right to make product changes or improvements without prior notice.

©September 2020 | A. O. Smith Corporation. All Rights Reserved

Commercial Gas

Water Heaters

SANDBLASTER®

SELF-CLEANING COMMERCIAL GAS WATER HEATER — SBD MODELS

Sandblaster® is the original money-saving self-cleaning water heater. It provides outstanding performance and installation flexibility for new construction and replacement applications. The Sandblaster SBD series offers installer-friendly features, including compact low-profile design, multiple options for water connections and low installation clearances.

FACTORY-INSTALLED DRAFT DIVERTER AND AUTOMATIC FLUE DAMPER (SBD-120-400 MODELS)

- Low-profile draft diverter helps for installation in tight spaces
- Automatic motorized flue damper helps minimize standby heat loss
- SBD85-500 Model features induced draft design and no damper

THREE WATER CONNECTION OPTIONS FOR ADDED FLEXIBILITY

- Hot and cold water connections can be made through front, top or back of unit
- HYDRO CANNON™ system operates when cold water is connected through front

PERMAGLAS® ULTRA COAT™ GLASS LINING

- Exclusive process provides superior protection against corrosion
- CoreGard™ anode rods with stainless steel core provide additional corrosion protection

INTERMITTENT ELECTRONIC IGNITION

- Eliminates standing pilot, saves energy
- Includes power ON/OFF switch
- Provides flame failure response in less than one second

FACTORY- INSTALLED, CSA CERTIFIED AND ASME RATED T&P RELIEF VALVE

MAXIMUM HYDROSTATIC WORKING PRESSURE: 160 PSI

CODES AND STANDARDS

- Design-certified by UL (Underwriters Laboratories), according to ANSI Z.21.10.3 - CSA 4.3 standards governing storage-type water heaters
- Meets the thermal efficiency and standby loss requirements of the U. S. Department of Energy and current edition of ASHRAE/ IESNA 90.1
- Design-certified by Underwriters Laboratories Sanitation to NSF Standard 5 for 180°F (82°C) water
- Optional ASME tank construction available on select models

HYDRO CANNON™ SELF-CLEANING SYSTEM

- Designed to significantly reduce or eliminate sediment build-up inside the tank
- Reduced sediment build-up maintains rated thermal efficiency and reduces water heating costs
- Self-cleaning system maximizes tank life

3-YEAR LIMITED TANK / 1-YEAR LIMITED PARTS WARRANTY

- For complete warranty information, consult written warranty or statewaterheaters.com

Low Lead Content

HLW

ON SELECT MODELS

GAS-FIRED

LISTED

CERTIFIED

WATER QUALITY

AHRI CERTIFIED®

www.ahridirectory.org

HYDRO CANNON™

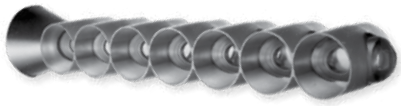

SOLID. STATE.

© January 2021 State Industries, LLC. All Rights Reserved

OTHER SANDBLASTER® FEATURES

FULLY AUTOMATIC CONTROL SYSTEM

- Manual-reset gas shut-off device prevents excessive water temperature
- Adjustable thermostat with 120ºF — 180ºF range
- Gas pressure regulator and pilot filter

HANDHOLE CLEANOUT

- Allows easy access to tank interior for cleaning

PLUG KITS

- Pipe nipples and caps included to plug unused water connections SANDBLASTER® options:

MANIFOLD KITS FOR MULTIPLE HEATER INSTALLATIONS

- 2-unit kit, Part Number 100109228
- 3-unit kit, Part Number 100109229
- 4-unit kit, Part Number 100109230

OPTIONAL LEG KIT TO MEET NSF STANDARD 5

- For all SBD models, Part Number 100109227

MECHANICAL VENTING KITS

- For SBD71 120NE through SBD100 199NES, Part Number 100110445
- For SBD100 250NE through SBD100 390NE, Part Number 100109235
- For installation of approved power venter to operate in conjunction with water heater thermostat
- Field wiring should conform to latest version of the National Electric Code ANSI/NFPA No.70
- For more information, consult manual shipped with water heater or contact the State Technical Support Center at 1-800-365-0024

Water Connections in Inches						
Model Number	Inlet			Outlet		
	Top	Front	Back	Top	Front	Back
SBD71 120NE	1-1/2	1-1/2	1-1/2	1-1/2	1-1/2	1-1/2
SBD81 154NE	1-1/2	1-1/2	1-1/2	1-1/2	1-1/2	1-1/2
SBD76 180NE	1-1/2	1-1/2	1-1/2	1-1/2	1-1/2	1-1/2
SBD100 199NET	1-1/2	1-1/2	1-1/2	1-1/2	1-1/2	1-1/2
SBD81 199N	1-1/2	1-1/2	1-1/2	1-1/2	1-1/2	1-1/2
SBD100 199NES(A)	1-1/2	2	2	1-1/2	2	2
SBD100 250NE(A)	1-1/2	2	2	1-1/2	2	2
SBD65 251NE(A)	N/A	1-1/2	1-1/2	N/A	1-1/2	1-1/2
SBD100 275NE(A)	1-1/2	2	2	1-1/2	2	2
SBD65 305NE(A)	N/A	1-1/2	1-1/2	N/A	1-1/2	1-1/2
SBD85 365NE	1-1/2	1-1/2	1-1/2	1-1/2	1-1/2	1-1/2
SBD100 390NE(A)	1-1/2	2	2	1-1/2	2	2
SBD85 500NE(A)	1-1/2	1-1/2	1-1/2	1-1/2	1-1/2	1-1/2

When ordering LP gas, Change the “N” to “P” in the model number. exp. SBD71 120PE

Commercial Gas

Water Heaters

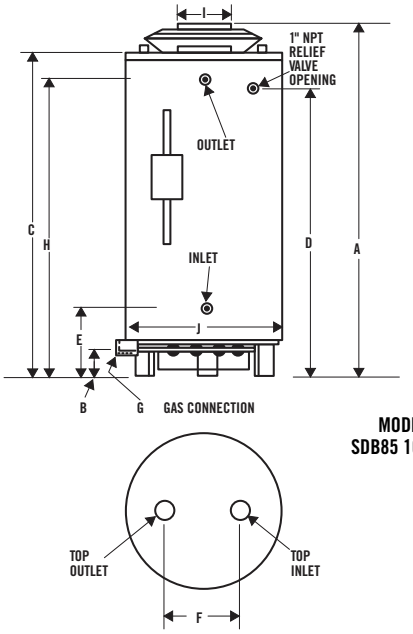

MODELS
SDB85 100-390

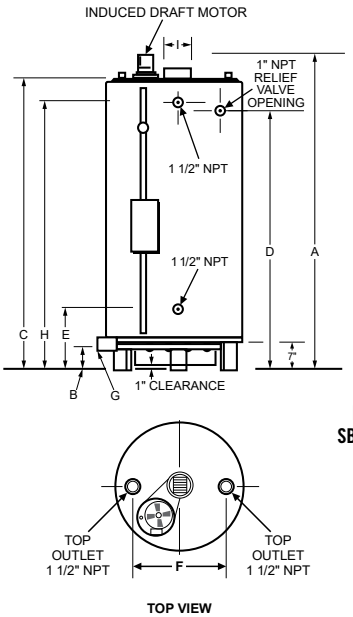

MODEL
SBD85 500

Model Number	Inches or CM	Dimensions										Approx. Shipping Weight	
		A	B	C	D	E	F	G	H	I	J	Standard	ASME
SBD71 120NE*	Inches	69-3/4"	4-1/4"	59-1/2"	50-7/8"	19-11/16"	19"	1/2"	51-7/8"	6"	27-3/4"	400 lbs.	-
	CM	177	11	151	129	50	48	-	132	15	71	182 Kg	-
SBD81 154NE	Inches	67-1/2"	4-1/2"	62"	53-1/2"	20-1/2"	21"	1/2"	54-5/8"	6"	27-3/4"	470 lbs.	-
	CM	171	12	157	136	52	53	-	139	15	71	213 Kg	-
SBD76 180NE	Inches	67-1/2"	4-1/2"	62"	53-1/2"	20-1/2"	21"	1/2"	54-5/8"	6"	27-3/4"	576 lbs.	-
	CM	171	12	157	136	52	53	-	139	15	71	261 Kg	-
SBD100 199NET	Inches	75"	4-1/2"	70	61-1/2"	20-1/2"	21"	1/2"	62-5/8"	6"	27-3/4"	603 lbs.	-
	CM	192	12	178	157	52	53	-	159	15	71	273 Kg	-
SBD81 199N	Inches	67-1/2"	4-1/2"	62	53-1/2"	20-1/2"	21"	1/2"	54-1/8"	6"	27-3/4"	470 lbs.	-
	CM	171	12	157	136	52	53	-	139	15	71	213 Kg	-
SBD100 199NES(A)	Inches	72"	4-1/2"	65-1/8"	55-7/8"	19-3/4"	23"	1/2"	56-3/8"	6"	30-1/4"	630 lbs.	725 lbs.
	CM	183	12	165	142	50	58	-	143	20	77	286 Kg	329 Kg
SBD100 250NE(A)**	Inches	72"	4-1/2"	65-1/8"	55-7/8"	19-3/4"	23"	1/2"	56-3/8"	8"	30-1/4"	630 lbs.	725 lbs.
	CM	183	12	165	142	50	58	-	143	20	77	286 Kg	329 Kg
SBD65 251NE(A)**	Inches	75"	4-1/2"	65-3/4"	57-1/4"	20"	N/A	1/2"	58-3/4"	8"	27-3/4"	750 lbs.	862 lbs.
	CM	191	12	167	145	51	N/A	-	149	20	70	341 Kg	391 Kg
SBD100 275NE(A)**	Inches	72"	4-1/2"	65-1/8"	55-7/8"	19-3/4"	23"	1/2"	56-3/8"	8"	30-1/4"	630 lbs.	725 lbs.
	CM	183	12	165	142	50	58	-	143	20	77	286 Kg	329 Kg
SBD65 305NE(A)	Inches	75"	4-1/2"	65 - 3/4"	57-1/4"	20"	N/A	1/2"	58-3/4"	8"	27.75	750 lbs.	862 lbs.
	CM	191	12	167	145	51	N/A	-	149	20	70	341 Kg	391 Kg
SBD85 365NE	Inches	79-1/2"	4-1/2"	70-1/4"	62-1/2"	22-1/2'	23"	3/4"	63"	8"	27-3/4"	725 lbs.	833 lbs.
	CM	202	12	178	159	57	58	-	160	20	71	329 Kg	379 Kg
SBD100 390NE(A)	Inches	75-1/2"	4-1/2"	67-1/2"	58-1/4"	26-3/4"	23"	3/4"	59"	8"	30-1/4"	760 lbs.	874 lbs.
	CM	192	12	171	148	68	58	-	150	20	77	345 Kg	396 Kg
SBD85 500NE(A)†**	Inches	81-1/2"	17.5"	77-1/4"	67-1/2"	27-1/8"	21"	1"	67-1/2"	8"	27-3/4"	812 lbs.	857 lbs.
	CM	209	44	196	171	69	53	3	171	20	70	368 Kg	389 Kg

When ordering LP gas, Change the "N" to "P" in the model number. exp. SBD71 120PE
*Model SBD71 120NE is shipped with a 6" x 5" flue outlet adapter.
**Models SBD100 250NE,SBD65 251NE, SBD100 275NE and SBD85 500NE are shipped with a 8" x 6" flue outlet adapter.
Standard models certified for sea level to 2,000 ft. elevation. Order SMR S54 for elevations up to 8,000 ft.
† SBD85 500NE model features induced draft design and no damper.
Back side water connections, Inlet and outlet, are represented by "E" and "H" respectively for height dimensions.

Model Number	Input BTU/HR	Gallons or Litres	Tank Size	Litres	Recovery - Gallons or Litres Per Hour at Degree Rise		
					40°F	100°F	140°F
					22°C	56°C	78°C
SBD71 120NE*	120,000	U.S. Gallons	71	GPH	291	116	83
		Litres	268	LPH	1102	439	314
SBD81 154NE	154,000	U.S. Gallons	81	GPH	373	149	107
		Litres	307	LPH	1412	564	405
SBD76 180NE	180,000	U.S. Gallons	76	GPH	434	174	124
		Litres	288	LPH	1643	659	469
SBD100 199NET	199,000	U.S. Gallons	100	GPH	482	193	132
		Litres	379	LPH	1825	731	500
SBD81 199NE	199,000	U.S. Gallons	81	GPH	482	193	132
		Litres	307	LPH	1825	731	500
SBD100 199NES(A)	199,000	U.S. Gallons	100	GPH	482	193	132
		Litres	379	LPH	1825	731	500
SBD100 250NE(A)**	250,000	U.S. Gallons	100	GPH	606	242	173
		Litres	379	LPH	2294	918	655
SBD65 251NE(A)**	251,000	U.S. Gallons	65	GPH	608	243	174
		Litres	246	LPH	2303	921	658
SBD100 275NE(A)**	275,000	U.S. Gallons	100	GPH	667	267	190
		Litres	379	LPH	2524	1009	721
SBD65 305NE(A)	305,000	U.S. Gallons	65	GPH	739	296	211
		Litres	246	LPH	2799	1120	800
SBD85 365NE(A)	365,000	U.S. Gallons	85	GPH	885	354	253
		Litres	322	LPH	3349	1340	957
SBD100 390NE(A)	390,000	U.S. Gallons	100	GPH	970	388	277
		Litres	379	LPH	3671	1468	1049
SBD85 500NE(A)†**	500,000	U.S. Gallons	85	GPH	1212	485	346
		Litres	322	LPH	4588	1835	1311

When ordering LP gas, Change the "N" to "P" in the model number. exp. SBD71 120PE
*Model SBD71 120NE is shipped with a 6" x 5" flue outlet adapter.
**Models SBD100 250NE,SBD65 251NE, SBD100 275NE and SBD85 500NE are shipped with a 8" x 6" flue outlet adapter.
Standard models certified for sea level to 2,000 ft. elevation. Order SMR S54 for elevations up to 8,000 ft.
† SBD85 500NE model features induced draft design and no damper.
Recovery based on 80% efficiency.

SPECIFICATION

(Natural or Propane) gas water heater(s) shall be State SANDBLASTER® model # _____ or equal, with a storage capacity of _____ gallons, an input rating of _____ BTUs per hour, a recovery rating of_____ gallons per hour (gph) at 100ºF rise and a maximum hydrostatic working pressure of 160 psi. Water heater(s) shall be protected against overheating caused by the buildup of scale, film and other sediment by a self-cleaning device, positioned inside the tank so that it directs the flow of inlet water to keep precipitated solids in suspension so that they are removed from the water heater on that or successive draws. Glasslined water heater(s) shall also be protected against electrolytic corrosion by multiple factory-installed anode rods. In addition, water heater(s) shall: 1) Be equipped with an integrated control system consisting of a 180ºF adjustable thermostat with upper and lower sensing bulbs. 2) Be equipped with intermittent electronic ignition, a manual reset gas shutoff device, a gas pressure regulator, factory-installed, CSA Certified and ASME Rated T&P relief valve and 2-3/4˝ x 3-3/4˝ tank inspection port. 3) Be design-certified by UL (Underwriters Laboratories) to current edition of ANSI Z.21.10.3 - CSA 4.3 standards governing storage-type water heaters. 4) Meets the thermal efficiency and standby loss requirements of the U. S. Department of Energy and Current Edition of ASHRAE/ IESNA 90.1. 5) Have a 3-year limited warranty against corrosion as outlined in the written warranty.

FOR TECHNICAL INFORMATION CALL (800) 365-0024. STATE WATER HEATERS RESERVES THE RIGHT TO MAKE PRODUCT CHANGES OR IMPROVEMENTS WITHOUT PRIOR NOTICE.

© January 2021 State Industries, LLC. All Rights Reserved

Commercial Gas Water Heaters

Cyclone® LV (Large Volume)

MODULATING BURNER & LARGE VOLUME TANK PROVIDE A HIGH EFFICIENCY, INTEGRATED SOLUTION

The full line of A. O. Smith Cyclone LV condensing water heaters has been designed to provide years of dependable service and feature industry leading technology. Models are available from 150,000 to 499,900 Btu/h and all deliver thermal efficiencies up to 96%. The unique helical coil heat exchanger limits weld joints for optimal service life while maximizing heat transfer.

Cyclone is the industry leader in high efficiency commercial water heating. Cyclone LV modulating models adjust firing rate to the specific demand further increasing efficiency and money savings.

INTELLIGENT CONTROL SYSTEM WITH TOUCH SCREEN DISPLAY AND ICOMM CONNECTIVETY ONBOARD*

- Exclusive A. O. Smith designed color touch display control system
- Display provides detailed water heater status information
- Precise temperature control adjustable from 90 to 180 degrees
- Built-in diagnostics
- Run history information
- Cyclone LV comes standard with iCOMM Wi-Fi connectivety onboard. Remotely monitor and adjust the water heater via the A. O. Smith app. No charge connectivety using Wi-Fi or Ethernet connection.
- Intelligent Demand Response (IDR) feature senses large water draws and automatically adjusts the differential setpoint. This feature increases the hot water available when it is needed the most.

SUBMERGED COMBUSTION CHAMBER, WITH HELICAL HEAT EXCHANGER COIL

- Positioned in center of tank, surrounded by water to virtually eliminate radiant heat loss from chamber
- Direct spark ignition
- Spiral heat exchanger keeps hot burner gases swirling, uses centrifugal force to maximize efficiency of heat transfer to water in tank
- Spiral heat exchanger reduces lime scale from forming on water-side surfaces, which maintains energy efficiency over time
- ASME Construction

POWERED ANODES STANDARD ON ALL MODELS

- Provides long-lasting tank protection in varying water conditions
- Powered anodes are non-sacrificial
- Automatically adjusts output needed to properly protect the tank

PERMAGLAS® ULTRA COAT™ GLASS LINING

- Glass coating is applied using a liquid slush coating technique to ensure uniform coating
- Heat exchanger coil is glassed both externally and internally for optimum protection

MECHANICAL VENTING VERSATILITY

- Conventional power venting or direct venting
- Vents vertically or through a sidewall
- Front located exhaust and condensate connections allow for easy install and access
- Vents with low cost PVC Schedule 40 intake and exhaust pipe. Approved for optional CPVC Schedule 40, Polypropylene and AL29-4C stainless steel vent materials
- Direct-vent intake and exhaust pipe can terminate separately outside building or through single opening, using concentric vent assembly
- Canadian installations require ULC S636 PVC/CPVC, ULC S636 Polypropylene and AL29-4C stainless steel pipe for intake and exhaust

HIGH EFFICIENCY MODULATING PRE-MIX POWERED BURNER

- Down-fired pre-mix burner provides optimum efficiency and quiet operation
- Top-mounted burner position prevents condensation from affecting burner operation

5-YEAR LIMITED TANK / 1-YEAR LIMITED PARTS WARRANTY

- For complete warranty information, consult written warranty or go to hotwater.com.

BTHL-150A THROUGH BTHL-500A MODEL SHOWN: BTHL-500A SERIES 300/301

Low Lead Content

ENERGY STAR (All models except BTHL-500A)

CERTIFIED UL WATER QUALITY

HLW

GAS-FIRED c UL us LISTED

iCOMM

AHRI CERTIFIED® www.ahridirectory.org

ASME

© May 2020 A. O. Smith Corporation. All Rights Reserved

Commercial Gas Water Heaters

OTHER FEATURES:

SPACE-SAVING DESIGN FOR INSTALLATION FLEXIBILITY

- Large volume, integrated solution eliminates need for multiple 100-gallon water heaters or separate storage tank
- Easy-to-remove top cover for convenient access to serviceable parts
- 0″ installation clearances on sides and rear, 1-1/2″ installation clearance on top
- Handhole cleanout allows easy access to tank interior for cleaning
- 0″ clearance to combustibles, approved for installation on combustible floors

CODES AND STANDARDS

- CSA certified and ASME rated T&P relief valve
- Maximum hydrostatic working pressure: 160 psi
- All models are design certified by Underwriters Laboratories (UL), Inc., to ANSI Z21.10.3 - CSA 4.3 Standards
- Meets the thermal efficiency and standby loss requirements of the U.S. Department of Energy and current edition ASHRAE/IES 90.1
- Design Certified by Underwriters Laboratories to NSF standard 5 for 180°F (62°C) water
- Complies with SCAQMD Rule 1146.2 and other Air Quality Management Districts with similar requirements for ultra low-NOx emissions
- ASME tank construction standard on all model sizes

VENT REQUIREMENTS FOR BTHL 150A - 250A

Number of 90° Elbows Installed	3 Inch Pipe	4 Inch Pipe
	Maximum Feet (Meters)	Maximum Feet (Meters)
One (1)	45 feet (13.7 meters)	115 feet (35 meters)
Two (2)	40 feet (12.2 meters)	110 feet (33.5 meters)
Three (3)	35 feet (10.7 meters)	105 feet (32 meters)
Four (4)	30 feet (9.1 meters)	100 feet (30.5 meters)
Five (5)	N/A	95 feet (29 meters)
Six (6)	N/A	90 feet (27.4 meters)

VENT REQUIREMENTS FOR BTHL 300A - 500A

Number of 90° Elbows Installed	4 Inch Pipe	6 Inch Pipe
	Maximum Feet (Meters)	Maximum Feet (Meters)
One (1)	65 feet (19.8 meters)	115 feet (35 meters)
Two (2)	60 feet (18.2 meters)	110 feet (33.5 meters)
Three (3)	55 feet (16.8 meters)	105 feet (32 meters)
Four (4)	50 feet (15.2 meters)	100 feet (30.5 meters)
Five (5)	45 feet (13.7 meters)	95 feet (29 meters)
Six (6)	40 feet (12.2 meters)	90 feet (27.4 meters)

GAS PRESSURE REQUIREMENTS

Model Number	Manifold Pressure		Minimum Supply Pressure		Maximum Supply Pressure	
	Natural Gas	Propane Gas	Natural Gas	Propane Gas	Natural Gas	Propane Gas
BTHL-150A	0" W.C. (0 kPa)	0" W.C. (0 kPa)	3.5" W.C. (1.10 kPa)	8.5" W.C. (2.12 kPa)	14" W.C. (3.49 kPa)	14" W.C. (3.49 kPa)
BTHL-199A	0" W.C. (0 kPa)	0" W.C. (0 kPa)	3.5" W.C. (1.10 kPa)	8.5" W.C. (2.12 kPa)	14" W.C. (3.49 kPa)	14" W.C. (3.49 kPa)
BTHL-250A	0" W.C. (0 kPa)	0" W.C. (0 kPa)	3.5" W.C. (1.10 kPa)	8.5" W.C. (2.12 kPa)	14" W.C. (3.49 kPa)	14" W.C. (3.49 kPa)
BTHL-300A	0" W.C. (0 kPa)	0" W.C. (0 kPa)	4.8" W.C. (1.19 kPa)	8.5" W.C. (2.12 kPa)	14" W.C. (3.49 kPa)	14" W.C. (3.49 kPa)
BTHL-400A	0" W.C. (0 kPa)	0" W.C. (0 kPa)	4.8" W.C. (1.19 kPa)	8.5" W.C. (2.12 kPa)	14" W.C. (3.49 kPa)	14" W.C. (3.49 kPa)
BTHL-500A	0" W.C. (0 kPa)	0" W.C. (0 kPa)	4.8" W.C. (1.19 kPa)	8.5" W.C. (2.12 kPa)	14" W.C. (3.49 kPa)	14" W.C. (3.49 kPa)

Depending on the installed equivalent length, and/or the number of appliances connected, the supply gas line size may need to be increased beyond the minimum required size.

Commercial Gas Water Heaters

BTHL 150A-250A

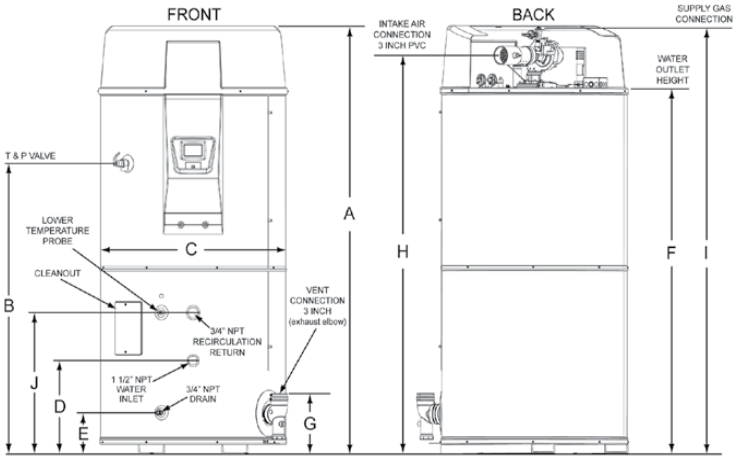

These designs comply with the current edition of the American National Standard for Gas Water Heaters, Volume III, ANSI Z21.10.3 / CSA 4.3 as an automatic circulating tank water heater, and automatic storage water heaters.

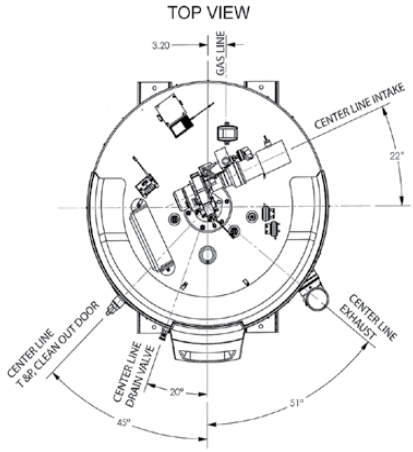

* Center line of water outlet on top of the water heaters is approximately 13 inches from the front edge of the water heater.

Figure 5. Rough-In Dimensions

Model Number	Approx. Capacity		Dimensions										lb/kg	Approx. Shipping Weight
			A	B	C	D	E	F	G	H	I	J		
BTHL-150A	Gallons	250	91-1/2	62-5/8	42-1/8	20-1/2	8-1/2	78-1/8	12	85	90-1/8	30-1/2	lb	1125
	Liters	946	232.4	159	107	52	21.6	196.4	30.4	215.9	228.9	77.4	kg	510
BTHL-199A	Gallons	250	91-1/2	62-5/8	42-1/8	20-1/2	8-1/2	78-1/8	12	85	90-1/8	30-1/2	lb	1125
	Liters	946	232.4	159	107	52	21.6	196.4	30.4	215.9	228.9	77.4	kg	510
BTHL-250A	Gallons	250	91-1/2	62-5/8	42-1/8	20-1/2	8-1/2	78-1/8	12	85	90-1/8	30-1/2	lb	1125
	Liters	946	232.4	159	107	52	21.6	196.4	30.4	215.9	228.9	77.4	kg	510

Electrical characteristics-120V-60Hz A.C., 5.0 A
"A" in model represents ASME construction
Propane gas models available
Dimensions and specifications subject to change without notice in accordance with our policy of continuous product improvement.

Commercial Gas Water Heaters

BTHL 300A-500A

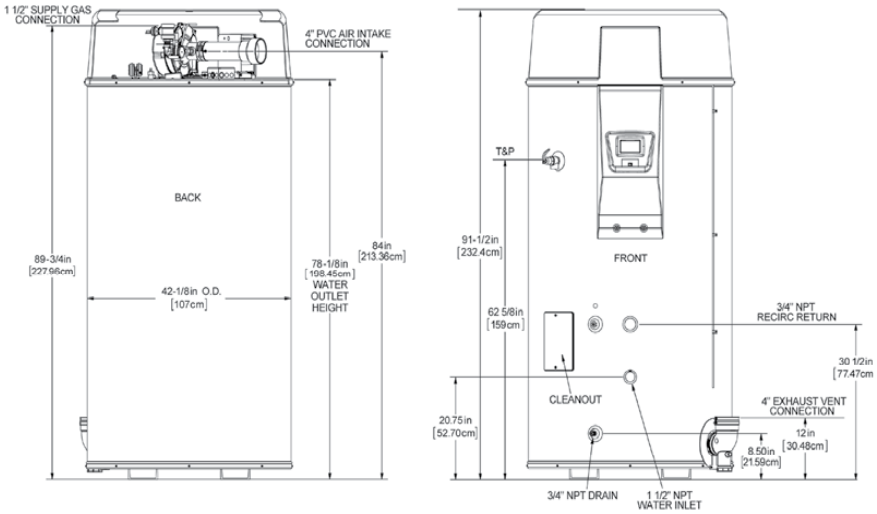

TOP VIEW

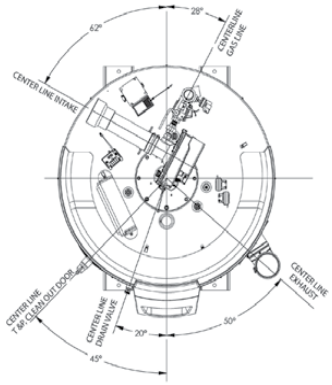

Model Number	Approx. Capacity		Dimensions										lb/kg	Approx. Shipping Weight
			A	B	C	D	E	F	G	H	I	J		
BTHL-300A	Gallons	220	91-1/2	62-5/8	42-1/8	20-3/4	8-1/2	78-1/8	12	84	89-3/4	30-1/2	lb	1420
	Liters	833	232.4	159	107	52.7	21.6	196.4	30.4	213.3	227.9	77.4	kg	644
BTHL-400A	Gallons	220	91-1/2	62-5/8	42-1/8	20-3/4	8-1/2	78-1/8	12	84	89-3/4	30-1/2	lb	1420
	Liters	833	232.4	159	107	52.7	21.6	196.4	30.4	213.3	227.9	77.4	kg	644
BTHL-500A	Gallons	220	91-1/2	62-5/8	42-1/8	20-3/4	8-1/2	78-1/8	12	84	89-3/4	30-1/2	lb	1420
	Liters	833	232.4	159	107	52.7	21.6	196.4	30.4	213.3	227.9	77.4	kg	644

Electrical characteristics-120V-60Hz A.C., 5.0 A
"A" in model represents ASME construction
Propane gas models available
Dimensions and specifications subject to change without notice in accordance with our policy of continuous product improvement.

Commercial Gas Water Heaters

RECOVERY CAPACITY

Model Number	Type of Gas	Input		Thermal Efficiency
		BTU/HR	kW	
BTHL-150A	Natural/Propane	150,000	44	96%
BTHL-199A	Natural/Propane	199,900	58	95%
BTHL-250A	Natural/Propane	250,000	73	94%
BTHL-300A	Natural/Propane	300,000	88	94%
BTHL-400A	Natural/Propane	399,900	117	93%
BTHL-500A	Natural/Propane	499,900	146	92%

Model Number	U.S. GALLONS AND LITRES/HR AT TEMPERATURE RISE INDICATED													
	Approx. Capacity	°F	30° F	40° F	50° F	60° F	70° F	80° F	90° F	100° F	110° F	120° F	130° F	140° F
		°C	17° C	22° C	28° C	33° C	39° C	44° C	50° C	56° C	61° C	67° C	72° C	78° C
BTHL-150A	250 U.S. Gals.	GPH	582	436	349	291	249	218	194	175	159	145	134	125
	946 Litres	LPH	2202	1652	1321	1101	944	826	734	661	601	551	508	472
BTHL-199A	250 U.S. Gals.	GPH	767	575	460	384	329	288	256	230	209	192	177	164
	946 Litres	LPH	2904	2178	1743	1452	1245	1089	968	871	792	726	670	622
BTHL-250A	250 U.S. Gals.	GPH	949	712	570	475	407	356	316	285	259	237	219	203
	946 Litres	LPH	9594	2695	2156	1797	1540	1348	1198	1078	980	898	829	770
BTHL-300A	220 U.S. Gals.	GPH	1139	855	684	570	488	427	380	342	311	285	263	244
	832 Litres	LPH	4313	3234	2588	2156	1848	1617	1438	1294	1176	1078	995	924
BTHL-400A	220 U.S. Gals.	GPH	1503	1127	902	751	644	563	501	451	410	376	347	322
	832 Litres	LPH	5688	4266	3413	2844	2438	2133	1896	1706	1551	1422	1313	1219
BTHL-500A	220 U.S. Gals.	GPH	1858	1394	1115	929	796	697	619	557	507	465	429	398
	832 Litres	LPH	7033	5275	4220	3517	3014	2638	2344	2110	1918	1758	1623	1507

Recovery capacities are based on AHRI rated thermal efficiencies.

STORAGE CAPACITY

Model Number	U.S. Gallons	Liters
BTHL-150A	250	946
BTHL-199A	250	946
BTHL-250A	250	946
BTHL-300A	220	833
BTHL-400A	220	833
BTHL-500A	220	833

GAS LINE CONNECTION SIZE

Model Number	Series	Natural Gas	Propane Gas
BTHL-150A	300/301	3/4" NPT	3/4" NPT
BTHL-199A	300/301	3/4" NPT	3/4" NPT
BTHL-250A	300/301	3/4" NPT	3/4" NPT
BTHL-300A	300/301	1-1/4" NPT	1-1/4" NPT
BTHL-400A	300/301	1-1/4" NPT	1-1/4" NPT
BTHL-500A	300/301	1-1/2" NPT	1-1/4" NPT

Commercial Gas Water Heaters

OPTIONAL KITS

OPTIONAL CONCENTRIC VENT KITS

- BTHL 150-250 vent kit p/n 100111100
- BTHL 300-500 vent kit p/n 100113124

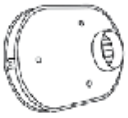

OPTIONAL LOW PROFILE TERMINATION VENT KITS

- 3″ Flush Mount Vent Kit p/n 100187887
- 4″ Flush Mount Vent Kit p/n 100187888
- 6″ Flush Mount Vent Kit p/n 100187889

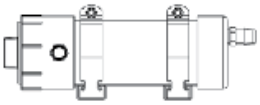

OPTIONAL CONDENSATE NEUTRALIZATION KITS

- BTHL 150-300 kit p/n 100289339
- BTHL 400-500 kit p/n 100289340

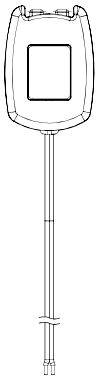

OPTIONAL LEAK DETECTION KIT

- BTHL 150 - 500 kit p/n 100302557

SPECIFICATION

(Natural or Propane) gas water heater(s) shall be A. O. Smith Cyclone LV model # _____ or equal, minimum 92% thermal efficiency, a storage capacity of _____ gallons, an input rating of _____ BTUs per hour, a recovery rating of _____ gallons per hour (gph) at 100°F rise and a maximum hydrostatic working pressure of 160 psi. Water heater(s) shall: 1. Modulating gas burner that automatically adjusts the input based on demand. 2. Powered anodes that are non sacrificial and maintenance free. 3. Have seamless glass-lined steel tank construction, with glass lining applied to all water-side surfaces after the tank has been assembled and welded; 4. Meets the thermal efficiency and/or standby loss requirements of the U. S. Department of Energy and current edition of ASHRAE/IES 90.1; 5. Have foam insulation and a CSA Certified and ASME rated T&P relief valve; 6. Have a down-fired power burner designed for precise mixing of air and gas for optimum efficiency, requiring no special calibration on start-up; 7. Be approved for 0″ clearance to combustibles.

The control shall be an integrated solid-state temperature and ignition control device with integral diagnostics, graphic user interface, fault history display, and shall have digital temperature readout. No charge connectivety shall be provided allowing for remote viewing and fault notificaion via app. 1. All models are design certified by Underwriters Laboratories (UL), Inc., according to ANSI Z21.10.3 - CSA 4.3 standards governing storage type water heaters; 2. Meet the thermal efficiency and standby loss requirements of the U. S. Department of Energy and current edition ASHRAE/IES 90.1. Complies with SCAQMD Rule 1146.2 and other air quality management districts with similar requirements for low NOx emissions.

150K-250K BTU Input: For Standard Power Venting: Water heater(s) shall be suitable for power venting using a (3″ or 4″) _____ diameter PVC pipe for a total distance of (50 ft or 120 ft.) _____ equivalent feet of vent piping. For Power Direct Venting: Water heater(s) shall be suitable for power direct venting using a (3″ or 4″) _____ diameter PVC pipe for a total distance of (50 ft or 120 ft.) _____ equivalent feet of vent piping and (50 ft. or 120 ft.)_____ equivalent feet of intake air piping.

300K - 500K BTU Input: For Standard Power Venting: Water heater(s) shall be suitable for standard power venting using a (4″ or 6″)_____ diameter PVC pipe for a total distance of (70 ft. or 120 ft.)_____ equivalent feet of vent piping. For Power Direct Venting: Water heater(s) shall be suitable for power direct venting using a (4″ or 6″) _____ diameter PVC pipe for a total distance of (70 ft or 120 ft.) _____ equivalent feet of vent piping and (70 ft. or 120 ft.)_____ equivalent feet of intake air piping.

Operation of the water heater(s) in a closed system where thermal expansion has not been compensated for (with a properly sized thermal expansion tank) will void the warranty.

For Technical Information, call 800-527-1953. A. O. Smith Corporation reserves the right to make product changes or improvements without prior notice.

© May 2020 A. O. Smith Corporation. All Rights Reserved

CREST COMMERCIAL CONDENSING BOILER	Lochinvar® HIGH EFFICIENCY BOILERS & WATER HEATERS	MODELS FB 0751 - FB 6001 Series 1**
Submittal Sheet		FBN-Sub-15

Job Name:	Location:	Contractor:	Type Gas:
CNMH CTC	Albuquerque, NM		Natural
Engineer:	**Model #:**	**Agent/Wholesaler:**	**Equipment Tag(s):**
B&P	FBN1001-8647	West Winn	B-1, B-2

SIDE

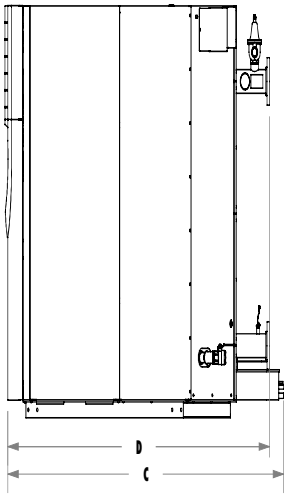

BACK

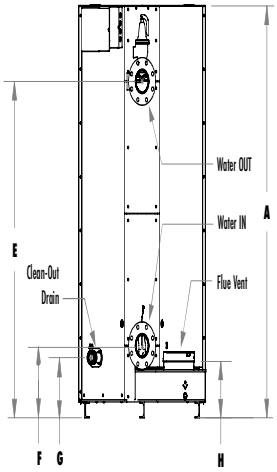

TOP

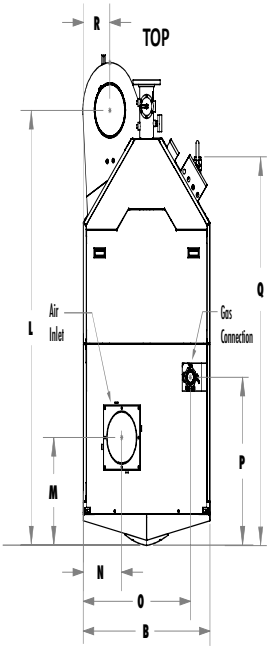

JOB NOTES:

Step Down Regulator

Notes:

- * *Insert "N" for natural gas and "L" for LP gas models.*
- *Indoor installation only.*
- *Low NOx Operation.*
- *Lochinvar should be consulted before selecting a boiler for installations having unusual piping and pickup requirements, such as intermittent system operation, extensive piping systems, etc.*
- *The ratings have been determined under the provisions governing forced draft burners.*
- *The Net AHRI water ratings shown are based on a piping and pickup allowance of 1.15.*

	Model Number	Input MBH Min	Input MBH Max	Turndown	Gross Output MBH	Net AHRI Rating MBH	Combustion Efficiency	Thermal Efficiency	A	B	C	D	E	F	G	H	L	M	N	O	P	Q	R	Gas Conn.	Water Inlet/ Outlet	Air Intake	Vent Size	Oper. Weight (with water)	Ship. Weight (lbs.)
○	FB*0751	50	750	15:1	722	628	96.4%	96.2%	78"	30"	55-1/2"	57-5/8"	66-1/8"	11-7/8"	11-3/8"	11-1/4"	51"	13"	8-3/4"	26-3/4"	23-3/4"	49-1/2"	7-3/8"	1-1/4"	3"	6"	6"	1,768	1,560
✓	FB*1001	50	999	20:1	961	836	96.4%	96.2%	78"	30"	56-1/2"	57-5/8"	66-1/8"	11-7/8"	11-3/8"	11-1/4"	51"	13"	8-3/4"	26-3/4"	23-1/8"	49-1/2"	6-1/2"	1-1/4"	3"	6"	6"	1,838	1,596
○	FB*1251	62.5	1,250	20:1	1,203	1,046	96.4%	96.2%	78"	30"	56-1/2"	57-3/4"	66-1/8"	11-7/8"	11-3/8"	11-1/4"	51-3/8"	13"	8-3/4"	26- 3/4"	21-5/8"	49-1/2"	6-1/2"	1-1/2"	3"	6"	8"	1,975	1,648
○	FB*1501	60	1,500	25:1	1,443	1,255	96.4%	96.2%	78"	30"	67-3/4"	68"	65-3/8"	12-3/8"	11-3/8"	11-1/4"	62-3/8"	15-7/8"	9"	26-7/8"	27-7/8"	59-1/4"	5-1/8"	1-1/2"	4"	8"	8"	2,307	1,961
○	FB*1751	70	1,750	25:1	1,684	1,464	96.4%	96.2%	78"	30"	66-1/4"	68"	65-3/8"	12-3/8"	11-3/8"	11-1/4"	61-1/2"	15-7/8"	9"	27"	27-1/8"	58-3/4"	5-1/8"	1-1/2"	4"	8"	8"	2,458	2,017
○	FB*2001	80	1,999	25:1	1,923	1,672	96.4%	96.2%	78"	30"	66-1/2"	68"	65-3/8"	12-3/8"	11-3/8"	11-1/4"	61-1/2"	15-7/8"	9"	27"	26-3/4"	58-3/4"	5-1/8"	1-1/2"	4"	8"	8"	2,570	2,087
○	FB*2501	125	2,500	20:1	2,400	2,087	96.1%	96.0%	77-3/4"	35"	83-3/4"	83-3/4"	63-3/4"	13-1/2"	11-1/4"	10-1/2"	76-1/4"	19-3/4"	9-1/4"	28-3/4"	32"	71"	7-1/4"	2"	4"	8"	9"	3,600	2,577
○	FB*3001	150	3,000	20:1	2,883	2,507	96.1%	96.0%	77-3/4"	35"	83-3/4"	83-3/4"	63-3/4"	13-1/2"	11-1/4"	10-1/2"	76-1/4"	19-3/4"	9-1/4"	28-3/4"	32"	71"	7-1/4"	2"	4"	10"	10"	3,900	2,881
○	FB*3501	175	3,500	20:1	3,364	2,925	96.1%	96.0%	77-3/4"	42"	91-1/2"	86-3/4"	63-1/2"	13-1/4"	11-1/2"	10-3/4"	82"	20-1/4"	12-3/4"	35-1/2"	31-3/4"	73-1/4"	8-3/4"	2"	4"	10"	10"	4,600	3,218
○	FB*4001	333.3	3,999	12:1	3,843	3,342	96.1%	96.0%	77-3/4"	45-1/2"	103-1/2"	99"	63-1/2"	13-3/4"	11-1/2"	10-3/4"	94"	24-3/4"	13-1/2"	39-1/2"	42-1/4"	85-1/4"	10-1/2"	2-1/2"	4"	12"	12"	5,200	3,805
○	FB*5001	499.9	4,999	10:1	4,804	4,177	96.1%	96.0%	77-3/4"	46-1/2"	102-1/4"	99-1/2"	63-1/2"	15"	11-1/2"	10-3/4"	92-1/2"	22"	14"	39-3/4"	39-1/2"	84"	9"	2-1/2"	6"	14"	14"	5,900	4,101
○	FB*6001	600	6,000	10:1	5,766	5,014	96.1%	96.0%	77-3/4"	50"	102-3/4"	99-3/4"	63-1/4"	14-3/4"	11-1/2"	10-3/4"	93-1/4"	20"	15-3/4"	43-1/2"	36-1/2"	83-3/4"	9-1/4"	3"	6"	14"	14"	6,900	4,711

Information subject to change without notice. Dimensions shown are approximate and should not be used for construction purposes.

CREST® CONDENSING BOILER

Codes & Registrations

- ANSI Z21.13/CSA Certified
- ASME Certified, "H" Stamp / National Board
- California Code Compliant
- Canadian Registration Number (CRN)
- CSD1 / Factory Mutual / GE Gap Compliant
- South Coast Air Quality Management District Qualified & Energy Star Rated (FB 0751-2001)

Smart Touch™ Features

CON·X·US Remote Connect

SMART TOUCH Touchscreen Operating Control

Full-Color 8" Touchscreen LCD Display

Built-in Cascading Sequencer for up to 8 Boilers
- › Built-in Redundancy
- › Cascade Multiple Sized Boilers
- › Lead/Lag Cascade
- › Efficiency Optimized Cascade

Front-End Loading Capability with Copper-Fin II® and Power-Fin® Boilers

Building Management System Integration with 0-10 VDC Input

BACnet MSTP Communications

Outdoor Reset Control with Outdoor Air Sensor

Password Security

Domestic Hot Water Prioritization
- › DHW tank piped with priority in the boiler loop
- › DHW tank piped as a zone in the system with the pumps controlled by the Smart System
- › DHW Modulation Limiting
- › Separately Adjustable SH/DHW Switching Times

Low Water Flow Safety Control & Indication

Inlet & Outlet Temperature Readout

Freeze Protection

Service Reminder

Time Clock

Data Logging
- › Hours Running, Space Heating
- › Hours Running, Domestic Hot Water
- › Hours Running, Modulation Rate
- › Ignition Attempts
- › Last 10 Lockouts

Programmable System Efficiency Optimizers
- › Night Setback
- › Anti-Cycling
- › Outdoor Air Reset Curve
- › Ramp Delay
- › Boost Temperature & Time
- › Modulation Factor Control

Three Pump Control
- › System Pump
- › Boiler Pump
- › Domestic Hot Water Pump

High-Voltage Terminal Strip
- › 120V/1PH/60Hz Power Supply (FB 0751-2001)
- › 208V/3PH/60Hz Power Supply (FB 2501-3501)
- › 480V/3PH/60Hz Power Supply (FB 4001-6001)
- › System Pump, Boiler Pump and DHW Pump Power

Low-Voltage Terminal Strip
- › 24 VAC Auxiliary Device Relay
- › Auxiliary Proving Switch Contacts
- › Alarm on Any Failure Contacts
- › Runtime Contacts
- › DHW Thermostat Contacts
- › Unit Enable/Disable Contacts
- › System Sensor Contacts
- › DHW Tank Sensor Contacts
- › Outdoor Air Sensor Contacts
- › Cascade Contacts
- › 0-10 VDC BMS External Control Contact
- › 0-10 VDC Variable Speed Boiler Pump Control Contact

Standard Features

- Proof of Closure Valve (FB 6001)
- Modulating Burner with up to 25:1 Turndown
- Direct-Spark Ignition
- Low NOx Operation
- Sealed Combustion
- Air Inlet Filter
- Low Gas Pressure Operation
- **Vertical and Horizontal Direct Venting**
  - › Direct Vent up to 100 Feet
  - › PVC, CPVC, Polypropylene or AL29-4C (FB 0751-4001)
  - › AL29-4C (FB 0751-6001)
- ASME "H" Stamped Heat Exchanger
- 316L Stainless Steel Fire Tubes
- 160 psi Working Pressure
- On/Off Switch
- Adjustable High Limit with Manual Reset
- Low Water Cutoff with Manual Reset & Test
- High & Low Gas Pressure Switches w/Manual Reset
- Low Air Pressure Switches
- Condensate Trap w/Blocked Drain Switch
- Drain Valve
- System Sensor
- Outdoor Air Sensor
- Inlet & Outlet Temperature Sensors
- High-Voltage Terminal Strip
- Low-Voltage Terminal Strip
- Downstream Gas Test Cocks
- 50 psi ASME Relief Valve
- Temperature & Pressure Gauge
- Zero Clearances to Combustible Materials
- High Altitude Models Available
- 10-Year Limited Warranty (See Warranty for Details)
- 1-Year Warranty on Parts (See Warranty for Details)

Optional Equipment

- ☐ Alarm on Any Failure
- ASME Relief Valve Option:
  - ☐ 75 psi ☐ 100 psi ☐ 125 psi ☐ 150 psi
- ☐ BMS Gateway - BACnet IP or LonWorks
- ☑ Condensate Neutralization Kit
- ☐ Common Vent Kits Damper
- ☐ Modbus Communication
- Short Circut Current Rating (SCCR) Options:
  - FB 2501 - 6001
  - ☐ ›100,000 A
  - ☐ ›200,000 A
- ☐ Motorized Isolation Valve
- ☐ RealTime O_2 Feedback™
- ☐ Variable Speed Boiler Pump
- ☐ Wireless Outdoor Temperature Sensor
- **Electrical Transformer Options** (Shipped Loose):
  - › FB 0751-2001
    - ☐ 208V/3PH/60Hz → 120V/1PH/60Hz
    - ☐ 480V/3PH/60Hz → 120V/1PH/60Hz
    - ☐ 600V/3PH/60Hz → 120V/1PH/60Hz
  - › FB 2501-3501
    - ☐ 480V/3PH/60Hz → 208V/3PH/60Hz
    - ☐ 600V/3PH/60Hz → 208V/3PH/60Hz
  - › FB 4001-6001
    - ☐ 208V/3PH/60Hz → 480V/3PH/60Hz
    - ☐ 600V/3PH/60Hz → 480V/3PH/60Hz

Lochinvar® HIGH EFFICIENCY BOILERS & WATER HEATERS

Lochinvar, LLC
300 Maddox Simpson Parkway
Lebanon, Tennessee 37090
P: 615.889.8900 / F: 615.547.1000
Lochinvar.com

3/22—Printed in U.S.A.

3. OPERATIONAL PLAN – AIR EMISSIONS DURING SSM

The University Psychiatric Center is owned and operated by University of New Mexico Hospitals. As soon as a malfunction occurs, the facility will shut down applicable equipment as soon as possible to ensure no excess emissions or non-permitted emissions are released. The facility will only startup again once it is identified that the malfunction is addressed, and the facility will operate as normal and permitted.

Additional details are provided in this section for each piece of equipment regarding specific steps UNMH will take should any malfunction occur on site as well as details regarding safety procedures and processes to ensure protection of employees, the general public, and the environment.

3.1 Emergency Generator Operational Plan

3.1.1 Emergency Generator Startup Procedure

A startup event for a Reciprocating Internal Combustion Engine (RICE) occurs when the unit is initially operated after being off. UNMH carefully monitors the entire startup process to ensure safety and minimize airborne emissions.

The following actions included in the operational plan are critical for minimizing emissions during startup:

- Minimizing cold engine startups. UNMH ensures warm engine startup by ensuring engine block heaters are online. These units are checked on a weekly basis.
- Ensuring the engine is achieving good combustion.
- Monitoring the opacity and color of the exhaust gasses and taking the unit offline for repairs upon the observation of abnormal soot coming out of the stacks.

3.1.2 Emergency Generator Shutdown Procedure

A shutdown event for a RICE occurs when the unit is shut down after a period of operation. UNMH carefully monitors the entire shutdown process to ensure safety and minimize airborne emissions.

The following actions included in the operational plan are critical for minimizing emissions during engine shutdown:

- Removing the full electrical load from the system and initiating a cool down cycle before the engine is stopped.
- Monitoring the opacity and color of the exhaust gasses and taking the unit offline for repairs upon the observation of abnormal soot coming out of the stacks.

3.1.3 Emergency Generator Maintenance

UNMH ensures the emergency generator RICE are appropriately maintained according to the manufacturer's recommendations. UNMH carefully monitors the engines to ensure safety and minimize airborne emissions during regularly scheduled maintenance events.
The following actions included in the maintenance operational plan are critical for minimizing emissions during the event:

- Ensure the engine is achieving good combustion during the maintenance activity;

- Monitoring the opacity and color of the exhaust gasses and taking the unit offline for repairs upon the observation of abnormal soot coming out of the stacks.

3.2 Boilers Operational Plan

3.2.1 Boiler Maintenance

UNMH ensures that all equipment will be maintained as per manufacturer specifications to ensure the emissions remain at or below the permitted levels.

4. AIR DISPERSION MODELING ANALYSIS

N/A – No modeling required. Facility consists of emergency generators and exempt sources.

APPENDIX A. APPLICATION FORMS

Application for Air Pollutant Sources in Bernalillo County Source Registration (20.11.40 NMAC) and Construction Permits (20.11.41 NMAC) – Updated February 2022

Permit Application Checklist

Permit Application Review Fee Checklist

City of Albuquerque – Environmental Health Department
Air Quality Program

Please mail this application to **P.O. Box 1293, Albuquerque, NM 87103**
or hand deliver between 8:00 am – 5:00 pm Monday – Friday to:
3rd Floor, Suite 3023 – One Civic Plaza NW, Albuquerque, NM 87102
(505) 768-1972 aqd@cabq.gov

Application for Air Pollutant Sources in Bernalillo County
Source Registration (20.11.40 NMAC) and Construction Permits (20.11.41 NMAC)

Submittal Date: September 23, 2022

Owner/Corporate Information ☐ **Check here and leave this section blank if information is exactly the same as Facility Information below.**

Company Name: **University of New Mexico Hospitals**			
Mailing Address: **2211 Lomas Blvd. NE**	City: **Albuquerque**	State: **NM**	Zip: **87106**
Company Phone: **(505) 446-0106**	Company Contact: **Gregory Smith**		
Company Contact Title: **Healthcare Facilities Planner**	Phone: **(505) 446-0106**	E-mail: **ghsmith@salud.unm.edu**	

Stationary Source (Facility) Information: **Provide a plot plan (legal description/drawing of the facility property) with overlay sketch of facility processes, location of emission points, pollutant type, and distances to property boundaries.**

Facility Name: **University Psychiatric Center**			
Facility Physical Address: **2600 Marble Ave NE.**	City: **Albuquerque**	State: **NM**	Zip: **87106**
Facility Mailing Address (if different): **N/A**	City: **N/A**	State: **N/A**	Zip: **N/A**
Facility Contact: **Gregory Smith**	Title: **Healthcare Facilities Planner**		
Phone: **(505) 446-0106**	E-mail: **ghsmith@salud.unm.edu**		
Authorized Representative Name[1]: **N/A**	Authorized Representative Title: **N/A**		

Billing Information ☒ **Check here if same contact and mailing address as corporate** ☐ **Check here if same as facility**

Billing Company Name:			
Mailing Address:	City:	State:	Zip:
Billing Contact:	Title:		
Phone:	E-mail:		

Preparer/Consultant(s) Information ☐ **Check here and leave section blank if no Consultant used or Preparer is same as Facility Contact.**

Name: **Michael Celente**	Title: **Senior Consultant**		
Mailing Address: **9400 Holly Ave NE, Building 3, Suite B**	City: **Albuquerque**	State: **NM**	Zip: **87122**
Phone: **(505) 266-6611**	Email: **mcelente@trinityconsultants.com**		

1. See 20.11.41.13(E)(13) NMAC.

Application for Air Pollutant Sources in Bernalillo County
Source Registration (20.11.40 NMAC) and Construction Permits (20.11.41 NMAC)

General Operation Information (if any question does not pertain to your facility, type N/A on the line or in the box)

Permitting action being requested (please refer to the definitions in 20.11.40 NMAC or 20.11.41 NMAC):			
☐ New Permit	☒ Permit Modification Current Permit #: **1671-M1**	☐ Technical Permit Revision Current Permit #:	☐ Administrative Permit Revision Current Permit #:
☐ New Registration Certificate	☐ Modification Current Reg. #:	☐ Technical Revision Current Reg. #:	☐ Administrative Revision Current Reg. #:
UTM coordinates of facility (Zone 13, NAD 83): **13 S, 352,680 m E, 3,884,328 m N**			
Facility type (*i.e.*, a description of your facility operations): **Emergency Generator**			
Standard Industrial Classification (SIC Code #): **8062**		North American Industry Classification System (NAICS Code #): **622110**	
Is this facility currently operating in Bernalillo County? **Yes**		If **YES**, list date of original construction: If **NO**, list date of planned startup:	
Is the facility permanent? **Yes**		If **NO**, list dates for requested temporary operation: From **N/A** Through **N/A**	
Is the facility a portable stationary source? **No**		If **YES**, is the facility address listed above the main permitted location for this source? **N/A**	
Is the application for a physical or operational change, expansion, or reconstruction (*e.g.*, altering process, or adding, or replacing process or control equipment, etc.) to an existing facility? **Yes**			
Provide a description of the requested changes: **Demolish current generator and replace with a 450 kW emergency generator, Replace existing boilers and water heaters with new units.**			
What is the facility's operation? ☐ Continuous ☒ Intermittent ☐ Batch			

Estimated percent of production/operation:	Jan-Mar: **25%**	Apr-Jun: **25%**	Jul-Sep: **25%**	Oct-Dec: **25%**
Requested operating times of facility:	**24** hours/day	**7** days/week	**4** weeks/month	**12** months/year

Will there be special or seasonal operating times other than shown above? This includes monthly- or seasonally-varying hours. **Yes**
If **YES**, please explain: **Emergency generator use limited to 500 hours per year.**
List raw materials processed: **N/A**
List saleable item(s) produced: **N/A**

USE INSTRUCTIONS: For the forms on the following pages, please do not alter or delete the existing footnotes or page breaks. If additional footnotes are needed then add them to the end of the existing footnote list for a given table. Only update the rows and cells within tables as necessary for your project. Unused rows can be deleted from tables. If multiple scenarios will be represented then the Uncontrolled and Controlled Emission Tables, and other tables as needed, can be duplicated and adjusted to indicate the different scenarios.

Regulated Emission Sources Table

(*E.g.*, Generator-Crusher-Screen-Conveyor-Boiler-Mixer-Spray Guns-Saws-Sander-Oven-Dryer-Furnace-Incinerator-Haul Road-Storage Pile, etc.) Match the Units listed on this Table to the same numbered line if also listed on Emissions Tables & Stack Table.

Unit Number and Description[1]		Manufacturer	Model #	Serial #	Manufacture Date	Installation Date	Modification Date[2]	Process Rate or Capacity (Hp, kW, Btu, ft^3, lbs, tons, yd^3, etc.)[3]	Fuel Type
1	**Generator**	**Cummins**	**DFEJ**	**TBD**	**> 7/11/2006**	**TBD**	**N/A**	**450 kW**	**Diesel**
		Cummins	**QSX15-G9**	**TBD**	**>7/11/2006**	**TBD**	**N/A**	**755 Hp**	**Diesel**
								/	
								/	
								/	
								/	

NOTE: To add extra rows in Word, click anywhere in the last row. A plus (+) sign should appear on the bottom right corner of the row. Click the plus (+) sign to add a row. Repeat as needed.

1. Unit numbers must correspond to unit numbers in the previous permit unless a complete cross reference table of all units in both permits is provided.
2. To determine whether a unit has been modified, evaluate if changes have been made to the unit that impact emissions or that trigger modification as defined in 20.11.41.7(U) NMAC. If not, put N/A.
3. Basis for Equipment Process Rate or Capacity (*e.g.*, Manufacturer's Data, Field Observation/Test, etc.) **Manufacturer Data**
   Submit information for each unit as an attachment.

Emissions Control Equipment Table

Control Equipment Units listed on this Table should either match up to the same Unit number as listed on the Regulated Emission Sources, Controlled Emissions and Stack Parameters Tables (if the control equipment is integrated with the emission unit) or should have a distinct Control Equipment Unit Number and that number should then also be listed on the Stack Parameters Table.

Control Equipment Unit Number and Description		Controlling Emissions for Unit Number(s)	Manufacturer	Model # | Serial #	Date Installed	Controlled Pollutant(s)	% Control Efficiency[1]	Method Used to Estimate Efficiency	Rated Process Rate or Capacity or Flow
N/A-There is no control equipment at this facility.									
				|					
				|					
				|					
				|					
				|					
				|					
				|					
				|					
				|					

NOTE: To add extra rows in Word, click anywhere in the last row. A plus (+) sign should appear on the bottom right corner of the row. Click the plus (+) sign to add a row. Repeat as needed.

1. Basis for Control Equipment % Efficiency (*e.g.*, Manufacturer's Data, Field Observation/Test, AP-42, etc.). _____
   Submit information for each unit as an attachment.

Exempted Sources and Exempted Activities Table

See 20.11.41 NMAC for exemptions.

Unit Number and Description		Manufacturer	Model #	Serial #	Manufacture Date	Installation Date	Modification Date[1]	Process Rate or Capacity (Hp, kW, Btu, ft^3, lbs, tons, yd^3, etc.)[2]	Fuel Type
299B-BLR-1	**Boiler**	**AERCO BMK 2500**	**BMK 2500**	**G-20-1179**	**1/2020**	**TBD**	**N/A**	**2.5 MMBtu/Hr**	**Natural Gas**
299B-BLR-2	**Boiler**	**AERCO BMK 2500**	**BMK 2500**	**G-20-1780**	**1/2020**	**TBD**	**N/A**	**2.5 MMBtu/Hr**	**Natural Gas**
299C-BLR-3	**Boiler**	**Ajax**	**WGFD-1500**	**83-35527**	**1983**	**1983**	**N/A**	**1.5 MMBtu/Hr**	**Natural Gas**
299B-WH-1a	**Water Heater**	**AO Smith**	**BTH-500A-300**	**193811405362**	**9/2019**	**TBD**	**N/A**	**0.5 MMBtu/Hr**	**Natural Gas**
299B-WH-1b	**Water Heater**	**AO Smith**	**BTH-500A-300**	**2002117731140**	**1/2020**	**TBD**	**N/A**	**0.5 MMBtu/Hr**	**Natural Gas**
299B-WH-1c	**Water Heater**	**AO Smith**	**BTH-500A-300**	**2043121530606**	**10/2020**	**TBD**	**N/A**	**0.5 MMBtu/Hr**	**Natural Gas**
299C-WH2	**Water Heater**	**State Industries**	**SBD100199NED118**	**1034M000858**	**8/2010**	**TBD**	**N/A**	**0.2 MMBtu/Hr**	**Natural Gas**
299E-BLR-1	**Boiler**	**Lochinvar**	**FBN1001**	**TBD**	**TBD**	**TBD**	**N/A**	**0.961 MMBtu/HR**	**Natural Gas**
299E-BLR-2	**Boiler**	**Lochinvar**	**FBN1001**	**TBD**	**TBD**	**TBD**	**N/A**	**0.961 MMBtu/HR**	**Natural Gas**
299E-WH-1	**Water Heater**	**AO Smith**	**BTHL-300A**	**TBD**	**TBD**	**TBD**	**N/A**	**0.3 MMBtu/HR**	**Natural Gas**

NOTE: To add extra rows in Word, click anywhere in the last row. A plus (+) sign should appear on the bottom right corner of the row. Click the plus (+) sign to add a row. Repeat as needed.

1. To determine whether a unit has been modified, evaluate if changes have been made to the unit that impact emissions or that trigger modification as defined in 20.11.41.7(U) NMAC. Also, consider if any changes that were made alter the status from exempt to non-exempt. If not, put N/A.
2. Basis for Equipment Process Rate or Capacity (*e.g.*, Manufacturer's Data, Field Observation/Test, etc.) **Manufacturer Data**
   Submit information for each unit as an attachment.

Uncontrolled Emissions Table

(Process potential under physical/operational limitations during a 24 hr/day and 365 day/year = 8760 hrs)

Regulated Emission Units listed on this Table should match up to the same numbered line and Unit as listed on the Regulated Emissions and Controlled Tables. List total HAP values per Emission Unit if overall HAP total for the facility is ≥ 1 ton/yr.

Unit Number*	Nitrogen Oxides (NO_X)		Carbon Monoxide (CO)		Nonmethane Hydrocarbons/Volatile Organic Compounds (NMHC/VOCs)		Sulfur Dioxide (SO_2)		Particulate Matter ≤ 10 Microns (PM_{10})		Particulate Matter ≤ 2.5 Microns ($PM_{2.5}$)		Hazardous Air Pollutants (HAPs)		Method(s) used for Determination of Emissions (AP-42, Material Balance, Field Tests, etc.)
	lb/hr	ton/yr	lb/hr	ton/yr	lb/hr	ton/yr	lb/hr	ton/yr	lb/hr	ton/yr	lb/hr	ton/yr	lb/hr	ton/yr	
1	**6.03**	**26.42**	**3.47**	**15.21**	**0.32**	**1.39**	**1.55**	**6.78**	**0.20**	**0.87**	**0.20**	**0.87**	**0.058**	**0.25**	**EPA Tier 2 Emissions, AP-42 Section 3.3. CARB Guidance**
Totals of Uncontrolled Emissions	**6.03**	**26.42**	**3.47**	**15.21**	**0.32**	**1.39**	**1.55**	**6.78**	**0.20**	**0.87**	**0.20**	**0.87**	**0.058**	**0.25**	

NOTE: To add extra rows in Word, click anywhere in the second-to-last row. A plus (+) sign should appear on the bottom right corner of the row. Click the plus (+) sign to add a row. Repeat as needed.

*A permit is required and this application along with the additional checklist information requested on the Permit Application checklist must be provided if:

(1) any one of these process units or combination of units, has an uncontrolled emission rate greater than or equal to (≥) 10 lbs/hr or 25 tons/yr for any of the above pollutants, excluding HAPs, based on 8,760 hours of operation; or

(2) any one of these process units or combination of units, has an uncontrolled emission rate ≥ 2 tons/yr for any single HAP or ≥ 5 tons/yr for any combination of HAPs based on 8,760 hours of operation; or

(3) any one of these process units or combination of units, has an uncontrolled emission rate ≥ 5 tons/yr for lead (Pb) or any combination of lead and its compounds based on 8,760 hours of operation; or

(4) any one of the process units or combination of units is subject to an Air Board or federal emission limit or standard.

* If all of these process units, individually and in combination, have an uncontrolled emission rate less than (<) 10 lbs/hr or 25 tons/yr for all of the above pollutants (based on 8,760 hours of operation), but > 1 ton/yr for any of the above pollutants, then a source registration is required. A Registration is required, at minimum, for any amount of HAP emissions. Please complete the remainder of this form.

Controlled Emissions Table

(Based on current operations with emission controls OR requested operations with emission controls)

Regulated Emission Units listed on this Table should match up to the same numbered line and Unit as listed on the Regulated Emissions and Uncontrolled Tables. List total HAP values per Emission Unit if overall HAP total for the facility is ≥ 1 ton/yr.

Unit Number	Nitrogen Oxides (NO_X)		Carbon Monoxide (CO)		Nonmethane Hydrocarbons/Volatile Organic Compounds (NMHC/VOCs)		Sulfur Dioxide (SO_2)		Particulate Matter ≤ 10 Microns (PM_{10})		Particulate Matter ≤ 2.5 Microns ($PM_{2.5}$)		Hazardous Air Pollutants (HAPs)		Control Method	% Efficiency[1]
	lb/hr	ton/yr	lb/hr	ton/yr	lb/hr	ton/yr	lb/hr	ton/yr	lb/hr	ton/yr	lb/hr	ton/yr	lb/hr	ton/yr		
1	**6.03**	**1.51**	**3.47**	**0.87**	**0.32**	**0.079**	**1.55**	**0.39**	**0.20**	**0.050**	**0.20**	**0.050**	**0.058**	**0.015**	**Hours of Operation**	**N/A**
Totals of Controlled Emissions	**6.03**	**1.51**	**3.47**	**0.87**	**0.32**	**0.079**	**1.55**	**0.39**	**0.20**	**0.050**	**0.20**	**0.050**	**0.058**	**0.015**		

NOTE: To add extra rows in Word, click anywhere in the second-to-last row. A plus (+) sign should appear on the bottom right corner of the row. Click the plus (+) sign to add a row. Repeat as needed.

1. Basis for Control Method % Efficiency (*e.g.*, Manufacturer's Data, Field Observation/Test, AP-42, etc.). **Hours of Operation.**
   Submit information for each unit as an attachment.

Hazardous Air Pollutants (HAPs) Emissions Table

Report the Potential Emission Rate for each HAP from each source on the Regulated Emission Sources Table that emits a given HAP. Report individual HAPs with ≥ 1 ton/yr total emissions for the facility on this table. Otherwise, report total HAP emissions for each source that emits HAPs and report individual HAPs in the accompanying application package in association with emission calculations. If this application is for a Registration solely due to HAP emissions, report the largest HAP emissions on this table and the rest, if any, in the accompanying application package.

Unit Number	Total HAPs															
	lb/hr	ton/yr	lb/hr	ton/yr	lb/hr	ton/yr	lb/hr	ton/yr	lb/hr	ton/yr	lb/hr	ton/yr	lb/hr	ton/yr	lb/hr	ton/yr
1	0.058	0.015														
Totals of HAPs for all units:	**0.058**	**0.015**														

NOTE: To add extra rows in Word, click anywhere in the second-to-last row. A plus (+) sign should appear on the bottom right corner of the row. Click the plus (+) sign to add a row. Repeat as needed.

Use Instructions: Copy and paste the HAPs table here if need to list more individual HAPs.

Purchased Hazardous Air Pollutant Table*

Product Categories (Coatings, Solvents, Thinners, etc.)	Hazardous Air Pollutant (HAP), or Volatile Hazardous Air Pollutant (VHAP) Primary To The Representative As Purchased Product	Chemical Abstract Service (CAS) Number of HAP or VHAP from Representative As Purchased Product	HAP or VHAP Concentration of Representative As Purchased Product (pounds/gallon, or %)	Concentration Determination (CPDS, SDS, etc.)[1]	Total Product Purchases For Category	(-)	Quantity of Product Recovered & Disposed For Category	(=)	Total Product Usage For Category
N/A-There are no purchased HAPs at this facility.									
1.					lb/yr gal/yr	(-)	lb/yr gal/yr	(=)	lb/yr gal/yr
2.					lb/yr gal/yr	(-)	lb/yr gal/yr	(=)	lb/yr gal/yr
3.					lb/yr gal/yr	(-)	lb/yr gal/yr	(=)	lb/yr gal/yr
4.					lb/yr gal/yr	(-)	lb/yr gal/yr	(=)	lb/yr gal/yr
5.					lb/yr gal/yr	(-)	lb/yr gal/yr	(=)	lb/yr gal/yr
6.					lb/yr gal/yr	(-)	lb/yr gal/yr	(=)	lb/yr gal/yr
7.					lb/yr gal/yr	(-)	lb/yr gal/yr	(=)	lb/yr gal/yr
8.					lb/yr gal/yr	(-)	lb/yr gal/yr	(=)	lb/yr gal/yr
9.					lb/yr gal/yr	(-)	lb/yr gal/yr	(=)	lb/yr gal/yr
.					lb/yr gal/yr	(-)	lb/yr gal/yr	(=)	lb/yr gal/yr
TOTALS					lb/yr gal/yr	(-)	lb/yr gal/yr	(=)	lb/yr gal/yr

NOTE: To add extra rows in Word, click anywhere in the second-to-last row. A plus (+) sign should appear on the bottom right corner of the row. Click the plus (+) sign to add a row. Repeat as needed.

NOTE: Product purchases, recovery/disposal and usage should be converted to the units listed in this table. If units cannot be converted please contact the Air Quality Program prior to making changes to this table.

1. Submit, as an attachment, information on one (1) product from each Category listed above which best represents the average of all the products purchased in that Category. CPDS = Certified Product Data Sheet; SDS = Safety Data Sheet

*** A Registration is required, at minimum, for any amount of HAP or VHAP emission.**
Emissions from purchased HAP usage should be accounted for on previous tables as appropriate.
A permit may be required for these emissions if the source meets the requirements of 20.11.41 NMAC.

Material and Fuel Storage Table

(*E.g.*, Tanks, barrels, silos, stockpiles, etc.)

Storage Equipment		Product Stored	Capacity (bbls, tons, gals, acres, etc.)	Above or Below Ground	Construction (Welded, riveted) & Color	Installation Date	Loading Rate[1]	Offloading Rate[1]	True Vapor Pressure	Control Method	Seal Type	% Eff.[2]
TK-1	**Diesel Tank**	**Diesel**	**850 Gallon**	**Above**	**N/A**	**TBD**	**N/A**	**N/A**	**N/A**	**N/A**	**N/A**	**N/A**

NOTE: To add extra rows in Word, click anywhere in the last row. A plus (+) sign should appear on the bottom right corner of the row. Click the plus (+) sign to add a row. Repeat as needed.

1. Basis for Loading/Offloading Rate (*e.g.*, Manufacturer's Data, Field Observation/Test, etc.). **N/A**
   Submit information for each unit as an attachment.
2. Basis for Control Method % Efficiency (*e.g.*, Manufacturer's Data, Field Observation/Test, AP-42, etc.). **N/A**
   Submit information for each unit as an attachment.

Stack Parameters Table

If any equipment from the Regulated Emission Sources Table is also listed in this Stack Table, use the same numbered line for the emission unit on both tables to show the association between the Process Equipment and its stack.

Unit Number and Description		Pollutant (CO, NOx, PM_{10}, etc.)	UTM Easting (m)	UTM Northing (m)	Stack Height (ft)	Stack Exit Temp. (°F)	Stack Velocity (fps)	Stack Flow Rate (acfm)	Stack Inside Diameter (ft)	Stack Type
1	Emergency Generator	CO, VOC, SO_2, PM_{10}, $PM_{2.5}$, NO_x	352,680 m E	3,884,328 m E	10	865 °F	148.25	3105 acfm	0.67	**Vertical**
										Select
										Select
										Select
										Select

NOTE: To add extra rows in Word, click anywhere in the last row. A plus (+) sign should appear on the bottom right corner of the row. Click the plus (+) sign to add a row. Repeat as needed.

Application for Air Pollutant Sources in Bernalillo County
Source Registration (20.11.40 NMAC) and Construction Permits (20.11.41 NMAC)

Certification

NOTICE REGARDING SCOPE OF A PERMIT: The Environmental Health Department's issuance of an air quality permit only authorizes the use of the specified equipment pursuant to the air quality control laws, regulations and conditions. Permits relate to air quality control only and are issued for the sole purpose of regulating the emission of air contaminants from said equipment. Air quality permits are not a general authorization for the location, construction and/or operation of a facility, nor does a permit authorize any particular land use or other form of land entitlement. It is the applicant's/permittee's responsibility to obtain all other necessary permits from the appropriate agencies, such as the City of Albuquerque Planning Department or Bernalillo County Department of Planning and Development Services, including but not limited to site plan approvals, building permits, fire department approvals and the like, as may be required by law for the location, construction and/or operation of a facility. For more information, please visit the City of Albuquerque Planning Department website at https://www.cabq.gov/planning and the Bernalillo County Department of Planning and Development Services website at https://www.bernco.gov/planning.

NOTICE REGARDING ACCURACY OF INFORMATION AND DATA SUBMITTED: Any misrepresentation of a material fact in this application and its attachments is cause for denial of a permit or revocation of part or all of the resulting registration or permit, and revocation of a permit for cause may limit the permitee's ability to obtain any subsequent air quality permit for ten (10) years. Any person who knowingly makes any false statement, representation, or certification in any application, record, report, plan or other document filed or required to be maintained under the Air Quality Control Act, NMSA 1978 §§ 74-2-1 to 74-2-17, is guilty of a misdemeanor and shall, upon conviction, be punished by a fine of not more than ten thousand dollars ($10,000) per day per violation or by imprisonment for not more than twelve months, or by both.

I, the undersigned, hereby certify that I have knowledge of the information and data represented and submitted in this application and that the same is true and accurate, including the information and date in any and all attachments, including without limitation associated forms, materials, drawings, specifications, and other data. I also certify that the information represented gives a true and complete portrayal of the existing, modified existing, or planned new stationary source with respect to air pollution sources and control equipment. I understand that there may be significant penalties for submitting false information, including the possibility of fines and imprisonment for knowing violations. I also understand that the person who has applied for or has been issued an air quality permit by the Department is an obligatory party to a permit appeal filed pursuant to 20.11.81 NMAC. Further, I certify that I am qualified and authorized to file this application, to certify the truth and accuracy of the information herein, and bind the source. Moreover, I covenant and agree to comply with any requests by the Department for additional information necessary for the Department to evaluate or make a final decision regarding the application.

Signed this 8 day of September, 20 22

Enrico D. Volpato
Print Name

Executive Director Facility Services UNMH
Print Title

Enrico D. Volpato
Signature

Role: ☑ Owner ☐ Operator

☐ Other Authorized Representative

v. February 1, 2022

City of Albuquerque
Environmental Health Department
Air Quality Program

Construction Permit (20.11.41 NMAC)
Application Checklist

This checklist must be returned with the application

Any person seeking a new air quality permit, a permit modification, or an emergency permit under 20.11.41 NMAC (Construction Permits) shall do so by filing a written application with the Albuquerque-Bernalillo County Joint Air Quality Program, which administers and enforces local air quality laws for the City of Albuquerque ("City") and Bernalillo County ("County"), on behalf of the City Environmental Health Department ("Department").

The Department will rule an application administratively incomplete if it is missing or has incorrect information. The Department may require additional information that is necessary to make a thorough review of an application, including but not limited to technical clarifications, emission calculations, emission factor usage, additional application review fees if any are required by 20.11.2 NMAC, and new or additional air dispersion modeling.

If the Department has ruled an application administratively incomplete three (3) times, the Department will deny the permit application. Any fees submitted for processing an application that has been denied will not be refunded. If the Department denies an application, a person may submit a new application and the fee required for a new application. The applicant has the burden of demonstrating that a permit should be issued.

The following are the minimum elements that shall be included in the permit application before the Department can determine whether an application is administratively complete and ready for technical review. It is not necessary to include an element if the Department has issued a written waiver regarding the element and the waiver accompanies the application. However, the Department shall not waive any federal requirements.

At all times before the Department has made a final decision regarding the application, an applicant has a duty to promptly supplement and correct information the applicant has submitted in an application to the Department. The applicant's duty to supplement and correct the application includes but is not limited to relevant information acquired after the applicant has submitted the application and additional information the applicant otherwise determines is relevant to the application and the Department's review and decision. While the Department is processing an application, regardless of whether the Department has determined the application is administratively complete, if the Department determines that additional information is necessary to evaluate or make a final decision regarding the application, the Department may request additional information and the applicant shall provide the requested additional information.

NOTICE REGARDING PERMIT APPEALS: A person who has applied for or has been issued an air quality permit by the Department shall be an obligatory party to a permit appeal filed pursuant to 20.11.81 NMAC.

NOTICE REGARDING SCOPE OF A PERMIT: The Department's issuance of an air quality permit only authorizes the use of the specified equipment pursuant to the air quality control laws, regulations and conditions. Permits relate to air quality control only and are issued for the sole purpose of regulating the emission of air contaminants from said equipment. Air quality permits are not a general authorization for the location, construction and/or operation of a facility, nor does a permit authorize any particular land use or other form of land entitlement. It is the applicant's/permittee's responsibility to obtain all other necessary permits from the appropriate agencies, such as the City Planning Department or County Department of Planning and Development Services, including but not limited to site plan approvals, building permits, fire department approvals and the like, as may be required by law for the location, construction and/or operation of a facility. For more information, please visit the City Planning Department website at https://www.cabq.gov/planning and the County Department of Planning and Development Services website at https://www.bernco.gov/planning.

The Applicant shall:

20.11.41.13(A) NMAC – Pre-Application Requirements:

Item	Completed	NA[1]	Waived[2]
(1) Request a pre-application meeting with the Department using the pre-application meeting request form.	☒	☐	☐
(2) Attend the pre-application meeting. Date of Pre-application meeting: 8/4/2022	☒	☐	☐

1. *Not Applicable*
2. *It is not necessary to include an element if the Department has issued a written waiver regarding the element and the waiver accompanies the application. However, the Department shall not waive any federal requirements.*

20.11.41.13(B) NMAC – Applicant's Public Notice Requirements:

Item	Included in Application	NA[1]	Waived[2]
(1) Provide public notice in accordance with the regulation, including by certified mail or electronic copy to the designated representative(s) of the recognized neighborhood associations and recognized coalitions that are within one-half mile of the exterior boundaries of the property on which the source is or is proposed to be located.	☒	☐	☐
• Contact list of representative(s) of neighborhood associations and recognized coalitions cannot be more than three months old from the application submittal date.	☒	☐	☐
• Provide notice using the Notice of Intent to Construct form.	☒	☐	☐
(2) In accordance with the regulation, post and maintain in a visible location a weather proof sign provided by the Department.	☒	☐	☐

1. *Not Applicable; For emergency permits, the public notice requirements in 20.11.41.24 NMAC shall apply instead.*
2. *It is not necessary to include an element if the Department has issued a written waiver regarding the element and the waiver accompanies the application. However, the Department shall not waive any federal requirements.*

The Permit Application shall include:

20.11.41.13(E) NMAC – Application Contents

Item	Included In Application	NA[1]	Waived[2]
(1) A complete permit application on the most recent form provided by the Department.	☒	☐	☐
(2) The application form includes:			
a. The owner's name, street and post office address, and contact information;	☒	☐	☐
b. The facility/ operator's name, street address and mailing address, if different from the owner;	☒	☐	☐
c. The consultant's name, and contact information, if applicable;	☒	☐	☐
d. All information requested on the application form is included (*i.e.*, the form is complete).	☒	☐	☐
(3) Date application is submitted.	☒	☐	☐
(4) Sufficient attachments for the following:			
a. Ambient impact analysis using an atmospheric dispersion model approved by the U.S. Environmental Protection Agency, and the Department to demonstrate compliance with the applicable ambient air quality standards. *See* 20.11.01 NMAC. If you are modifying an existing source, the modeling must include the	☐	☒	☐

Item	Included In Application	NA[1]	Waived[2]
emissions of the entire source to demonstrate the impact the new or modified source(s) will have on existing plant emissions.			
b. The air dispersion model has been executed pursuant to a protocol that was approved in advance by the Department.	☐	☒	☐
c. Air dispersion modeling approved protocol date:	☐	☒	☐
d. Basis or source for each emission rate (including manufacturer's specification sheet, AP-42 section sheets, test data, or corresponding supporting documentation for any other source used).	☒	☐	☐
e. All calculations used to estimate potential emission rates and controlled/proposed emissions.	☒	☐	☐
f. Basis for the estimated control efficiencies and sufficient engineering data for verification of the control equipment operation, including if necessary, design, drawing, test report and factors which affect the normal operation.	☒	☐	☐
g. Fuel data for each existing and/or proposed piece of fuel burning equipment.	☒	☐	☐
h. Anticipated maximum production capacity of the entire facility and the requested production capacity after construction and/or modification.	☒	☐	☐
i. Stack and exhaust gas parameters for all existing and proposed emission stacks.	☒	☐	☐
(5) An operational and maintenance strategy detailing:	☒	☐	☐
a. steps the applicant will take if a malfunction occurs that may cause emission of a regulated air contaminant to exceed a limit that is included in the permit;	☒	☐	☐
b. the nature of emission during routine startup or shutdown of the source and the source's air pollution control equipment; and	☒	☐	☐
c. the steps the application will take to minimize emissions during routine startup or shutdown.	☒	☐	☐
(6) A map, such as a 7.5'-topographic quadrangle map published by the U.S. Geological Survey or a map of equivalent or greater scale, detail, and precision, including a City or County zone atlas map that shows the proposed location of each process equipment unit involved in the proposed construction, modification, or operation of the source, as applicable.	☒	☐	☐
(7) An aerial photograph showing the proposed location of each process equipment unit involved in the proposed construction, modification, relocation or technical revision of the source except for federal agencies or departments involved in national defense or national security as confirmed and agreed by the Department in writing.	☒	☐	☐
(8) A complete description of all sources of regulated air contaminants and a process flow diagram depicting the process equipment unit or units at the facility, both existing and proposed, that are proposed to be involved in routine operations and from which regulated air contaminant emissions are expected to be emitted.	☒	☐	☐
(9) A full description of air pollution control equipment, including all calculations and the basis for all control efficiencies presented, manufacturer's specifications sheets, and site layout and assembly drawings; UTM (universal transverse mercator) coordinates shall be used to identify the location of each emission unit.	☒	☐	☐
(10) A description of the equipment or methods proposed by the applicant to be used for emission measurement.	☒	☐	☐
(11) The maximum and normal operating time schedules of the source after completion of construction or modification, as applicable.	☒	☐	☐
(12) Any other relevant information as the Department may reasonably require, including without limitation:	☒	☐	☐
a. Applicants shall provide documentary proof that the proposed air quality permitted use of the facility's subject property is allowed by the zoning designation of the City or County zoning laws, as applicable. Sufficient documentation includes: (i) a zoning certification from the City Planning Department or County Department of Planning and Development Services, as applicable, if the property is subject to City or County zoning jurisdiction; or (ii) a zoning verification from both planning	☒	☐	☐

Item	Included In Application	NA[1]	Waived[2]
departments if the property is not subject to City or County zoning jurisdiction.[3] A zone atlas map shall not be sufficient.			
(13) The signature of the applicant, operator, owner or an authorized representative, certifying to the accuracy of all information as represented in the application and attachments, if any.	☒	☐	☐
(14) A check or money order for the appropriate application fee or fees required by 20.11.2 NMAC (Fees).	☒	☐	☐

1. *Not Applicable*
2. *It is not necessary to include an element if the Department has issued a written waiver regarding the element and the waiver accompanies the application. However, the Department shall not waive any federal requirements.*
3. *For emergency permit applications, applicants are not required to submit documentation for the subject property's zoning designation.*

City of Albuquerque

Environmental Health Department
Air Quality Program

Permit Application Review Fee Instructions

All source registration, authority-to-construct, and operating permit applications for stationary or portable sources shall be charged an application review fee according to the fee schedule in 20.11.2 NMAC. These filing fees are required for both new construction, reconstruction, and permit modifications applications. Qualified small businesses as defined in 20.11.2 NMAC may be eligible to pay one-half of the application review fees and 100% of all applicable federal program review fees.

Please fill out the permit application review fee checklist and submit with a check or money order payable to the "City of Albuquerque Fund 242" and either:

1. be delivered in person to the Albuquerque Environmental Health Department, 3rd floor, Suite 3023 or Suite 3027, Albuquerque-Bernalillo County Government Center, south building, One Civic Plaza NW, Albuquerque, NM or,

2. mailed to Attn: Air Quality Program, Albuquerque Environmental Health Department, P.O. Box 1293, Albuquerque, NM 87103.

The department will provide a receipt of payment to the applicant. The person delivering or filing a submittal shall attach a copy of the receipt of payment to the submittal as proof of payment Application review fees shall not be refunded without the written approval of the manager. If a refund is requested, a reasonable professional service fee to cover the costs of staff time involved in processing such requests shall be assessed. Please refer to 20.11.2 NMAC (effective January 10, 2011) for more detail concerning the "Fees" regulation as this checklist does not relieve the applicant from any applicable requirement of the regulation.

City of Albuquerque

Environmental Health Department
Air Quality Program

Permit Application Review Fee Checklist Effective January 1, 2022 – December 31, 2022

Please completely fill out the information in each section. Incompleteness of this checklist may result in the Albuquerque Environmental Health Department not accepting the application review fees. If you should have any questions concerning this checklist, please call 768-1972.

I. COMPANY INFORMATION:

Company Name	University of New Mexico Hospitals	
Company Address	2211 Lomas Blvd. NE, Albuquerque, NM 87106	
Facility Name	University Psychiatric Center	
Facility Address	2600 Marble Ave NE, Albuquerque, NM 87106	
Contact Person	Gregory Smith	
Contact Person Phone Number	(505) 446-0106	
Are these application review fees for an existing permitted source located within the City of Albuquerque or Bernalillo County?	**Yes**	
If yes, what is the permit number associated with this modification?	**Permit # 1671-M1**	
Is this application review fee for a Qualified Small Business as defined in 20.11.2 NMAC? (See Definition of Qualified Small Business on Page 4)		**No**

II. STATIONARY SOURCE APPLICATION REVIEW FEES:

If the application is for a new stationary source facility, please check all that apply. If this application is for a modification to an existing permit please see Section III.

Check All That Apply	Stationary Sources	Review Fee	Program Element
	Air Quality Notifications		
	AQN New Application	$599.00	2801
	AQN Technical Amendment	$327.00	2802
	AQN Transfer of a Prior Authorization	$327.00	2803
X	*Not Applicable*	*See Sections Below*	
	Stationary Source Review Fees (Not Based on Proposed Allowable Emission Rate)		
	Source Registration required by 20.11.40 NMAC	$ 610.00	2401
	A Stationary Source that requires a permit pursuant to 20.11.41 NMAC or other board regulations and are not subject to the below proposed allowable emission rates	$ 1,220.00	2301
X	*Not Applicable*	*See Sections Below*	
	Stationary Source Review Fees (Based on the Proposed Allowable Emission Rate for the single highest fee pollutant)		
	Proposed Allowable Emission Rate Equal to or greater than 1 tpy and less than 5 tpy	$915	2302
	Proposed Allowable Emission Rate Equal to or greater than 5 tpy and less than 25 tpy	$1,830	2303
	Proposed Allowable Emission Rate Equal to or greater than 25 tpy and less than 50 tpy	$3,661	2304
	Proposed Allowable Emission Rate Equal to or greater than 50 tpy and less than 75 tpy	$5,491	2305
	Proposed Allowable Emission Rate Equal to or greater than 75 tpy and less than 100 tpy	$7,321	2306
	Proposed Allowable Emission Rate Equal to or greater than 100 tpy	$9,152	2307
X	*Not Applicable*	*See Section Above*	

Federal Program Review Fees (In addition to the Stationary Source Application Review Fees above)			
	40 CFR 60 - "New Source Performance Standards" (NSPS)	$1,220	2308
	40 CFR 61 - "Emission Standards for Hazardous Air Pollutants (NESHAPs)	$1,220	2309
	40 CFR 63 - (NESHAPs) Promulgated Standards	$1,220	2310
	40 CFR 63 - (NESHAPs) Case-by-Case MACT Review	$12,202	2311
	20.11.61 NMAC, Prevention of Significant Deterioration (PSD) Permit	$6,101	2312
	20.11.60 NMAC, Non-Attainment Area Permit	$6,101	2313
X	*Not Applicable*	*Not Applicable*	

III. MODIFICATION TO EXISTING PERMIT APPLICATION REVIEW FEES:

If the permit application is for a modification to an existing permit, please check all that apply. If this application is for a new stationary source facility, please see Section II.

Check All That Apply	Modifications	Review Fee	Program Element
Modification Application Review Fees (Not Based on Proposed Allowable Emission Rate)			
	Proposed modification to an existing stationary source that requires a permit pursuant to 20.11.41 NMAC or other board regulations and are not subject to the below proposed allowable emission rates	$ 1,220	2321
X	*Not Applicable*	*See Sections Below*	
Modification Application Review Fees (Based on the Proposed Allowable Emission Rate for the single highest fee pollutant)			
X	Proposed Allowable Emission Rate Equal to or greater than 1 tpy and less than 5 tpy	$915	2322
	Proposed Allowable Emission Rate Equal to or greater than 5 tpy and less than 25 tpy	$1,830	2323
	Proposed Allowable Emission Rate Equal to or greater than 25 tpy and less than 50 tpy	$3,661	2324
	Proposed Allowable Emission Rate Equal to or greater than 50 tpy and less than 75 tpy	$5,491	2325
	Proposed Allowable Emission Rate Equal to or greater than 75 tpy and less than 100 tpy	$7,321	2326
	Proposed Allowable Emission Rate Equal to or greater than 100 tpy	$9,152	2327
	Not Applicable	*See Section Above*	
Major Modifications Review Fees (In addition to the Modification Application Review Fees above)			
	20.11.60 NMAC, Permitting in Non-Attainment Areas	$6,101	2333
	20.11.61 NMAC, Prevention of Significant Deterioration	$6,101	2334
X	*Not Applicable*	*Not Applicable*	
Federal Program Review Fees (This section applies only if a Federal Program Review is triggered by the proposed modification) (These fees are in addition to the Modification and Major Modification Application Review Fees above)			
	40 CFR 60 - "New Source Performance Standards" (NSPS)	$1,220	2328
	40 CFR 61 - "Emission Standards for Hazardous Air Pollutants (NESHAPs)	$1,220	2329
	40 CFR 63 - (NESHAPs) Promulgated Standards	$1,220	2330
	40 CFR 63 - (NESHAPs) Case-by-Case MACT Review	$12,202	2331
	20.11.61 NMAC, Prevention of Significant Deterioration (PSD) Permit	$6,101	2332
	20.11.60 NMAC, Non-Attainment Area Permit	$6,101	2333
X	*Not Applicable*	*Not Applicable*	

IV. ADMINISTRATIVE AND TECHNICAL REVISION APPLICATION REVIEW FEES:

If the permit application is for an administrative or technical revision of an existing permit issued pursuant to 20.11.41 NMAC, please check one that applies.

Check One	Revision Type	Review Fee	Program Element
	Administrative Revisions	$ 250.00	2340
	Technical Revisions	$ 500.00	2341
X	*Not Applicable*	*See Sections II, III or V*	

V. PORTABLE STATIONARY SOURCE RELOCATION FEES:

If the permit application is for a portable stationary source relocation of an existing permit, please check one that applies.

Check One	Portable Stationary Source Relocation Type	Review Fee	Program Element
	No New Air Dispersion Modeling Required	$ 500.00	2501
	New Air Dispersion Modeling Required	$ 750.00	2502
X	*Not Applicable*	*See Sections II, III or V*	

VI. Please submit a check or money order in the amount shown for the total application review fee.

Section Totals	Review Fee Amount
Section II Total	$
Section III Total	$915
Section IV Total	$
Section V Total	$
Total Application Review Fee	**$915**

I, the undersigned, a responsible official of the applicant company, certify that to the best of my knowledge, the information stated on this checklist, give a true and complete representation of the permit application review fees which are being submitted. I also understand that an incorrect submittal of permit application reviews may cause an incompleteness determination of the submitted permit application and that the balance of the appropriate permit application review fees shall be paid in full prior to further processing of the application.

Signed this 8 **day of** September **20**22

Enrico D. Valpato — **Print Name**

Executive Director Facility Services UNMH — **Print Title**

Enrico D Valpato — **Signature**

Definition of Qualified Small Business as defined in 20.11.2 NMAC:

"Qualified small business" means a business that meets all of the following requirements:

(1) a business that has 100 or fewer employees;
(2) a small business concern as defined by the federal Small Business Act;
(3) a source that emits less than 50 tons per year of any individual regulated air pollutant, or less than 75 tons per year of all regulated air pollutants combined; and
(4) a source that is not a major source or major stationary source.

Note: Beginning January 1, 2011, and every January 1 thereafter, an increase based on the consumer price index shall be added to the application review fees. The application review fees established in Subsection A through D of 20.11.2.18 NMAC shall be adjusted by an amount equal to the increase in the consumer price index for the immediately-preceding year. Application review fee adjustments equal to or greater than fifty cents ($0.50) shall be rounded up to the next highest whole dollar. Application review fee adjustments totaling less than fifty cents ($0.50) shall be rounded down to the next lowest whole dollar. The department shall post the application review fees on the city of Albuquerque environmental health department air quality program website.

APPENDIX B. PRE-PERMIT APPLICATION MEETING

Pre-Permit Application Meeting Request Form

Pre-Permit Application Meeting Checklist

Pre-Permit Application Meeting Request Form

Air Quality Program- Environmental Health Department

Please complete appropriate boxes and email to aqd@cabq.gov or mail to:

Environmental Health Department
Air Quality Program
P.O. Box 1293
Room 3047
Albuquerque, NM 87103

Name:	**University of New Mexico Hospitals**
Company/Organization:	University of New Mexico Hospitals: University Psychiatric Center (formerly Patient Transfer Facility) (Permit #: 1671-M1) UNM Research Incubator Building (Permit #: 1716) Ophthalmology Clinic (Permit #: N/A – New) Lamberton Building (Permit #: N/A – New)
Point of Contact: **(phone number and email):** **Preferred form of contact (circle one):** Phone E-mail ☑	Contact: Michael Celente, Senior Consultant Phone: (505) 266-6611 Email: mcelente@trinityconsultants.com
Preferred meeting date/times:	As soon as practical for the EHD.
Description of Project:	UNMH is requesting a pre-application meeting for permit modifications or initial construction permit applications for four (4) facilities. Per the attached email, and in the interest of time and resources, UNMH is requesting the pre-application meetings for all of these facilities be combined into one meeting. Details for each facility are included below: • The Patient Transfer facility is being modified and as a result, the existing emergency generator and exempt water heaters/boilers are being replaced. A name change to University Psychiatric Center is requested as well. • The existing emergency generator associated with the UNM Research Incubator Building is being relocated as a result of UNMH construction. • A new emergency generator is proposed at the Lamberton Building. • A new emergency generator is proposed at the Ophthalmology Clinic.

City of Albuquerque

Environmental Health Department
Air Quality Program

Pre-Permit Application Meeting Checklist

Any person seeking a permit under 20.11.41 NMAC, Authority-to-Construct Permits, shall do so by filing a written application with the Department. Prior to submitting an application, the applicant shall contact the department in writing and request a pre-application meeting for information regarding the contents of the application and the application process. This checklist is provided to aid the applicant and **a copy must be submitted with the application.**

Applications that are ruled incomplete because of missing information will delay any determination or the issuance of the permit. The Department reserves the right to request additional relevant information prior to ruling the application complete in accordance with 20.11.41 NMAC.

Name: UNMH University Psychiatric Center
Contact: Gregory Smith
Company/Business: University of New Mexico Hospital

☑ Fill out and submit a Pre-Permit Application Meeting Request form
⇒ Available online at http://www.cabq.gov/airquality

☑ Emission Factors and Control Efficiencies
Notes: AP-42, EPA Tier Emission Factors, Reduction in Hours of Operation

☑ Air Dispersion modeling guidelines and protocol
Notes: Not required for emergency generators or exempt sources. No modeling required.

☑ Department Policies
Notes: New zoning policy effective February 1, 2022. Need zoning verification for each site.

☑ Air quality permit fees
Notes: Fee based on emissions and NSPS & NESHAP review.

City of Albuquerque- Environmental Health Department
Air Quality Program- Permitting Section
Phone: (505) 768-1972 Email: aqd@cabq.gov

☑ Public notice requirements

- ☑ Replacement Part 41 Implementation
  - ☑ *20.11.41.*13 B. Applicant's public notice requirements
    - ☑ Providing public notice to neighborhood association/coalitions
      - Neighborhood association: Campus Neighborhood Association, Nob Hill Neighborhood Association, North Campus Neighborhood Association, Silver Hill Neighborhood Association, Spruce Park Neighborhood Association, Summit Park Neighborhood Association, Sycamore Neighborhood Association, University Heights Neighborhood Association
      - Coalition: District 6 Coalition of Neighborhood Associations
        Notes:

    - ☑ Posting and maintaining a weather-proof sign
      Notes:

☑ Regulatory timelines

- 30 days to rule application complete
- 90 days to issue completed permit
- Additional time allotted if there is significant public interest and/or a significant air quality issue
  - Public Information Hearing
  - Complex permitting action

Notes: Department is short staffed. Extension is expected.

City of Albuquerque- Environmental Health Department
Air Quality Program- Permitting Section
Phone: (505) 768-1972 Email: aqd@cabq.gov

APPENDIX C. NOTICE OF INTENT TO CONSTRUCT

Notice of Intent (NOI) to Construct

Notice of Intent Cover Letter

Email Documentation of NOI Sent to Neighborhood Associations and Coalitions

Public Notice Sign Guidelines Checklist

Pictures of Posted Notice

SUBJECT: Public Notice of Proposed Air Quality Construction Permit Application

Dear Neighborhood Association/Coalition Representative(s),

Why did I receive this public notice?
You are receiving this notice in accordance with New Mexico Administrative Code (NMAC) 20.11.41.13.B(1) which requires any applicant seeking an Air Quality Construction Permit pursuant to 20.11.41 NMAC to provide public notice by certified mail or electronic mail to the designated representative(s) of the recognized neighborhood associations and recognized coalitions that are within one-half mile of the exterior boundaries of the property on which the source is or is proposed to be located.

What is the Air Quality Permit application review process?
The City of Albuquerque, Environmental Health Department, Air Quality Program (Program) is responsible for the review and issuance of Air Quality Permits for any stationary source of air contaminants within Bernalillo County. Once the application is received, the Program reviews each application and rules it either complete or incomplete. Complete applications will then go through a 30-day public comment period. Within 90 days after the Program has ruled the application complete, the Program shall issue the permit, issue the permit subject to conditions, or deny the requested permit or permit modification. The Program shall hold a Public Information Hearing pursuant to 20.11.41.15 NMAC if the Director determines there is significant public interest and a significant air quality issue is involved.

What do I need to know about this proposed application?

Applicant Name	Gregory Smith
Site or Facility Name	University Psychiatric Center
Site or Facility Address	2600 Marble Avenue NE, Albuquerque, NM 87106
New or Existing Source	EXISTING
Anticipated Date of Application Submittal	September 23, 2022
Summary of Proposed Source to Be Permitted	The application is to modify existing Construction Permit #1671-M1. The modification includes demolishing and replacing the generator on the property. The generator will be restricted to 500 hours of operation. Replace existing exempt boilers and water heaters.

What emission limits and operating schedule are being requested?
See attached Notice of Intent to Construct form for this information.

How do I get additional information regarding this proposed application?
For inquiries regarding the proposed source, contact:

- Gregory Smith
- ghsmith@salud.unm.edu
- (505) 466-0106

For inquiries regarding the air quality permitting process, contact:

- City of Albuquerque Environmental Health Department Air Quality Program
- aqd@cabq.gov
- (505) 768-1972

NOTICE FROM THE APPLICANT

Notice of Intent to Apply for Air Quality Construction Permit

You are receiving this notice because the New Mexico Air Quality Control Act (20.11.41.13B NMAC) requires any owner/operator proposing to construct or modify a facility subject to air quality regulations to provide public notice by certified mail or electronic mail to designated representatives of recognized neighborhood associations and coalitions within 0.5-mile of the property on which the source is or is proposed to be located.

This notice indicates that the owner/operator intends to apply for an Air Quality Construction Permit from the Albuquerque – Bernalillo County Joint Air Quality Program. Currently, no application for this proposed project has been submitted to the Air Quality Program. Applicants are required to include a copy of this form and documentation of mailed notices with their Air Quality Construction Permit Application.

Proposed Project Information

Applicant's name and address:
Nombre y domicilio del solicitante: University of New Mexico Hospital-University Psychiatric Center, 2600 Marble Ave NE, Albuquerque, NM 87106

Owner / operator's name and address:
Nombre y domicilio del propietario u operador: University of New Mexico Hospitals, 2211 Lomas Blvd. NE, Albuquerque, NM 87106

Contact for comments and inquires:
Datos actuales para comentarios y preguntas:

Name *(Nombre)*: Gregory Smith
Address *(Domicilio)*: 2600 Marble Ave NE, Albuquerque, NM 87106
Phone Number *(Número Telefónico)*: (505) 446-0106
E-mail Address *(Correo Electrónico)*: ghsmith@salud.unm.edu

Actual or estimated date the application will be submitted to the department:
Fecha actual o estimada en que se entregará la solicitud al departamento: September 23, 2022

Description of the source:
Descripción de la fuente: Emergency Generator

Exact location of the source or proposed source:
Ubicación exacta de la fuente o fuente propuesta: 2600 Marble Ave NE, Albuquerque, NM 87106

Nature of business:
Tipo de negocio: Emergency Generator

Process or change for which the permit is requested:
Proceso o cambio para el cuál de solicita el permiso: Demolish existing generator and replace with new 450 kW generator. The building will be replaced. Replace existing exempt boilers and water heaters.

Maximum operating schedule:
Horario máximo de operaciones: 500 hours per year

Normal operating schedule:
Horario normal de operaciones: N/A

Preliminary estimate of the maximum quantities of each regulated air contaminant the source will emit:
Estimación preliminar de las cantidades máximas de cada contaminante de aire regulado que la fuente va a emitir:

Air Contaminant *Contaminante de aire*	**Proposed Construction Permit** *Permiso de Construcción Propuesto*		**Net Changes (for permit modification or technical revision)** *Cambio Neto de Emisiones (para modificación de permiso o revisión técnica)*	
	pounds per hour *libras por hora*	tons per year *toneladas por año*	pounds per hour *libras por hora*	tons per year *toneladas por año*
CO	3.47	0.87	+1.37	+0.35
NOx	6.03	1.51	+3.75	+0.94
VOC	0.32	0.079	+0.20	+0.049
SO2	1.55	0.39	+0.80	+0.20
PM10	0.20	0.050	+0.088	+0.020
PM2.5	0.20	0.050	+0.088	+0.020
HAP	0.058	0.015	N/A	N/A

Questions or comments regarding this Notice of Intent should be directed to the Applicant. Contact information is provided with the Proposed Project Information on the first page of this notice. To check the status of an Air Quality Construction Permit application, call 311 and provide the Applicant's information, or visit www.cabq.gov/airquality/air-quality-permits.

The Air Quality Program will issue a Public Notice announcing a 30-day public comment period on the permit application for the proposed project when the application is deemed complete. The Air Quality Program does not process or issue notices on applications that are deemed incomplete. More information about the air quality permitting process is attached to this notice.

Air Quality Construction Permitting Overview

This is the typical process to obtain an Air Quality Construction Permit for Synthetic Minor and Minor sources of air pollution from the Albuquerque – Bernalillo County Joint Air Quality Program.

Step 1: Pre-application Meeting: The Applicant and their consultant must request a meeting with the Air Quality Program to discuss the proposed action. If air dispersion modeling is required, Air Quality Program staff discuss the modeling protocol with the Applicant to ensure that all proposed emissions are considered.

> **Notice of Intent from the Applicant:** Before submitting their application, the Applicant is required to notify all nearby neighborhood associations and interested parties that they intend to apply for an air quality permit or modify an existing permit. The Applicant is also required to post a notice sign at the facility location.

Step 2: Administrative Completeness Review and Preliminary Technical Review: The Air Quality Program has 30 days from the day the permit is received to review the permit application to be sure that it is administratively complete. This means that all application forms must be signed and filled out properly, and that all relevant technical information needed to evaluate any proposed impacts is included. If the application is not complete, the permit reviewer will return the application and request more information from the Applicant. Applicants have three opportunities to submit an administratively complete application with all relevant technical information.

> **Public Notice from the Department:** When the application is deemed complete, the Department will issue a Public Notice announcing a 30-day public comment period on the permit application. This notice is distributed to the same nearby neighborhood associations and interested parties that the Applicant sent notices to, and published on the Air Quality Program's website.
>
> During this 30-day comment period, individuals have the opportunity to submit written comments expressing their concerns or support for the proposed project, and/or to request a Public Information Hearing. If approved by the Environmental Health Department Director, Public Information Hearings are held after the technical analysis is complete and the permit has been drafted.

Step 3: Technical Analysis and Draft Permit: Air Quality Program staff review all elements of the proposed operation related to air quality, and review outputs from advanced air dispersion modeling software that considers existing emission levels in the area surrounding the proposed project, emission levels from the proposed project, and meteorological data. The total calculated level of emissions is compared to state and federal air quality standards and informs the decision on whether to approve or deny the Applicant's permit.

Draft Permit: The permit will establish emission limits, standards, monitoring, recordkeeping, and reporting requirements. The draft permit undergoes an internal peer review process to determine if the emissions were properly evaluated, permit limits are appropriate and enforceable, and the permit is clear, concise, and consistent.

> **Public Notice from the Department:** When the technical analysis is complete and the permit has been drafted, the Department will issue a second Public Notice announcing a 30-day public comment period on the technical analysis and draft permit. This second Public Notice, along with the technical analysis documentation and draft permit, will be published on the Air Quality Program's website, and the public notice for availability of the technical analysis and draft permit will only be directly sent to those who requested further information during the first comment period.

During this second 30-day comment period, residents have another opportunity to submit written comments expressing their concerns or support for the proposed project, and/or to request a Public Information Hearing.

Possible Public Information Hearing: The Environmental Health Department Director may decide to hold a Public Information Hearing for a permit application if there is significant public interest and a significant air quality issue. If a Public Information Hearing is held, it will occur after the technical analysis is complete and the permit has been drafted.

Step 4: Public Comment Evaluation and Response: The Air Quality Program evaluates all public comments received during the two 30-day public comment periods and Public Information Hearing, if held, and updates the technical analysis and draft permit as appropriate. The Air Quality Program prepares a response document to address the public comments received, and when a final decision is made on the permit application, the comment response document is published on the Air Quality Program's website and distributed to the individuals who participated in the permit process. If no comments are received, a response document is not prepared.

Step 5: Final Decision on the Application: After public comments are addressed and the final technical review is completed, the Environmental Health Department makes a final decision on the application. If the permit application meets all applicable requirements set forth by the New Mexico Air Quality Control Act and the federal Clean Air Act, the permit is approved. If the permit application does not meet all applicable requirements, it is denied.

Notifications of the final decision on the permit application and the availability of the comment response document is published on the Air Quality Program's website and distributed to the individuals who participated in the permit process.

The Department must approve a permit application if the proposed action will meet all applicable requirements and if it demonstrates that it will not result in an exceedance of ambient air quality standards. Permit writers are very careful to ensure that estimated emissions have been appropriately identified or quantified and that the emission data used are acceptable.

The Department must deny a permit application if it is deemed incomplete three times, if the proposed action will not meet applicable requirements, if estimated emissions have not been appropriately identified or quantified, or if the emission data are not acceptable for technical reasons.

For more information about air quality permitting, visit www.cabq.gov/airquality/air-quality-permits

Timothy M. Keller,
Mayor

Public Participation

List of Neighborhood Associations
and Neighborhood Coalitions
MEMORANDUM

To: Michael Celente, Senior Consultant, Trinity Consultants
From: Elizabeth Pomo, Senior Environmental Health Scientist, City of Albuquerque
Subject: Determination of Neighborhood Associations and Coalitions within 0.5 mile of 2600 Marble Ave NE in Bernalillo County, NM
Date: August 23, 2022

DETERMINATION:

On August 23, 2022 I used the City of Albuquerque Zoning Advanced Map Viewer (http://coagisweb.cabq.gov/) to verify which City of Albuquerque Neighborhood Associations (NA), Homeowner Associations (HOA) and Neighborhood Coalitions (NC) are located within 0.5 mile of 2600 Marble Ave NE in Bernalillo County, NM.

I then used the City of Albuquerque Office (COA) of Neighborhood Coordination's Monthly Master NA List dated August 2022 and the Bernalillo County (BC) Monthly Neighborhood Association August 2022 Excel file to determine the contact information for each NA and NC located within 0.5 mile of 2600 Marble Ave NE in Bernalillo County, NM.

The table below contains the contact information, which will be used in the City of Albuquerque Environmental Health Department's public notice. Duplicates have been deleted.

COA/BC Association or Coalition	Name	Email or Mailing Address
Campus Neighborhood Association	Kenny Stansbury Calvin Martin Association Email	kenny.stansbury@gmail.com; calmartin93@gmail.com; campus.neighborhood.assoc@gmail.com;
District 6 Coalition of Neighborhood Associations	Mandy Warr Patricia Willson	mandy@theremedydayspa.com; info@willsonstudio.com;
Nob Hill Neighborhood Association	Jeff Hoehn Gary Eyster Association Email	jeffh@clnabq.org; meyster1@me.com; theboard@nobhill-nm.com;
North Campus Neighborhood Association	Tim Davis Sara Koplik Association Email	tdavisnm@gmail.com; sarakoplik@hotmail.com; northcampusna@gmail.com;
Silver Hill Neighborhood Association	Don McIver James Montalbano Association Email	dbodinem@gmail.com; ja.montalbano@gmail.com; silverhillabq@gmail.com;
Spruce Park Neighborhood Association	Peter Swift John Cochran Bart Cimenti	pnswift@comcast.net; jrcochr@gmail.com; bartj505@gmail.com;

Timothy M. Keller,
Mayor

Public Participation

List of Neighborhood Associations
and Neighborhood Coalitions
MEMORANDUM

Summit Park Neighborhood Association	Kate Franchini Joe Brooks Association Email	franchini.kathryn@gmail.com; joebrooks@homesinabq.com; summitparkNA@gmail.com;
Sycamore Neighborhood Association	Richard Vigliano Mardon Gardella	richard@vigliano.net; mg411@q.com;
University Heights Neighborhood Association	Mandy Warr Don Hancock Association Email	mandy@theremedydayspa.com; sricdon@earthlink.net; info@uhanm.org;

Mike Celente

From: Mike Celente
Sent: Friday, September 23, 2022 12:43 PM
To: kenny.stansbury@gmail.com; calmartin93@gmail.com; campus.neighborhood.assoc@gmail.com; mandy@theremedydayspa.com; info@willsonstudio.com; jeffh@clnabq.org; meyster1@me.com; theboard@nobhill-nm.com; tdavisnm@gmail.com; sarakoplik@hotmail.com; northcampusna@gmail.com; dbodinem@gmail.com; ja.montalbano@gmail.com; silverhillabq@gmail.com; pnswift@comcast.net; jrcochr@gmail.com; bartj505@gmail.com; franchini.kathryn@gmail.com; joebrooks@homesinabq.com; summitparkNA@gmail.com; richard@vigliano.net; mg411@q.com; mandy@theremedydayspa.com; sricdon@earthlink.net; info@uhanm.org
Cc: Munoz-Dyer, Carina G.; Pomo, Elizabeth
Subject: Public Notice of Proposed Air Quality Construction Permit Application - UNMH - University Psychiatric Center
Attachments: UNMH_Psychiatric_Center_Notice_of_Intent 2022 0923.pdf

Dear Neighborhood Association/Coalition Representative(s),

Why did I receive this public notice?
You are receiving this notice in accordance with New Mexico Administrative Code (NMAC) 20.11.41.13.B(1) which requires any applicant seeking an Air Quality Construction Permit pursuant to 20.11.41 NMAC to provide public notice by certified mail or electronic mail to the designated representative(s) of the recognized neighborhood associations and recognized coalitions that are within one-half mile of the exterior boundaries of the property on which the source is or is proposed to be located.

What is the Air Quality Permit application review process?
The City of Albuquerque, Environmental Health Department, Air Quality Program (Program) is responsible for the review and issuance of Air Quality Permits for any stationary source of air contaminants within Bernalillo County. Once the application is received, the Program reviews each application and rules it either complete or incomplete. Complete applications will then go through a 30-day public comment period. Within 90 days after the Program has ruled the application complete, the Program shall issue the permit, issue the permit subject to conditions, or deny the requested permit or permit modification. The Program shall hold a Public Information Hearing pursuant to 20.11.41.15 NMAC if the Director determines there is significant public interest and a significant air quality issue is involved.

What do I need to know about this proposed application?
Applicant Name: University of New Mexico Hospitals
Site or Facility Name: University Psychiatric Center
Site or Facility Address: 2600 Marble Ave NE, Albuquerque, NM 87106
New or Existing Source: EXISTING
Anticipated Date of Application Submittal: September 23, 2022
Summary of Proposed Source to Be Permitted: The application is to modify existing Construction Permit #1671-M1. The modification includes demolishing and replacing the generator on the property. The generator will be restricted to 500 hours of operation. Replace existing exempt boilers and water heaters.

What emission limits and operating schedule are being requested?
See attached Notice of Intent to Construct form for this information.

How do I get additional information regarding this proposed application?
For inquiries regarding the proposed source, contact:

- Gregory Smith
- Ghsmith@salud.unm.edu
- (505) 466-0106

For inquiries regarding the air quality permitting process, contact:

- City of Albuquerque Environmental Health Department Air Quality Program
- aqd@cabq.gov

- (505) 768-1972

Michael Celente, M.S.
Senior Consultant

P 505.266.6611
9400 Holly Ave NE, Building 3, Suite B | Albuquerque, NM 87122
Email: mcelente@trinityconsultants.com

Connect with us: LinkedIn / Facebook / Twitter / YouTube / trinityconsultants.com

Stay current on environmental issues. Subscribe today to receive Trinity's free *EHS Quarterly*.

City of Albuquerque

Environmental Health Department
Air Quality Program

Public Notice Sign Guidelines

Any person seeking a permit under 20.11.41 NMAC, Authority-to-Construct Permits, shall do so by filing a written application with the Department. *Prior to submitting an application, the applicant shall post and maintain a weather-proof sign provided by the department. The applicant shall keep the sign posted until the department takes final action on the permit application; if an applicant can establish to the department's satisfaction that the applicant is prohibited by law from posting, at either location required, the department may waive the posting requirement and may impose different notification requirements.* **A copy of this form must be submitted with your application.**

Applications that are ruled incomplete because of missing information will delay any determination or the issuance of the permit. The Department reserves the right to request additional relevant information prior to ruling the application complete in accordance with 20.11.41 NMAC.

Name: University Psychiatric Center
Contact: Gregory Smith
Company/Business: University of New Mexico Hospitals

☐ ☑ The sign must be posted at the more visible of either the proposed or existing facility entrance (or, if approved in advance and in writing by the department, at another location on the property that is accessible to the public)

☐ ☑ The sign shall be installed and maintained in a condition such that members of the public can easily view, access, and read the sign at all times.

☐ ☑ The lower edge of the sign board should be mounted a minimum of 2' above the existing ground surface to facilitate ease of viewing

☐ ☑ Attach a picture of the completed, properly posted sign to this document

☐ ☐ **Check here if the department has waived the sign posting requirement.**
Alternative public notice details:

Ver. 11/13

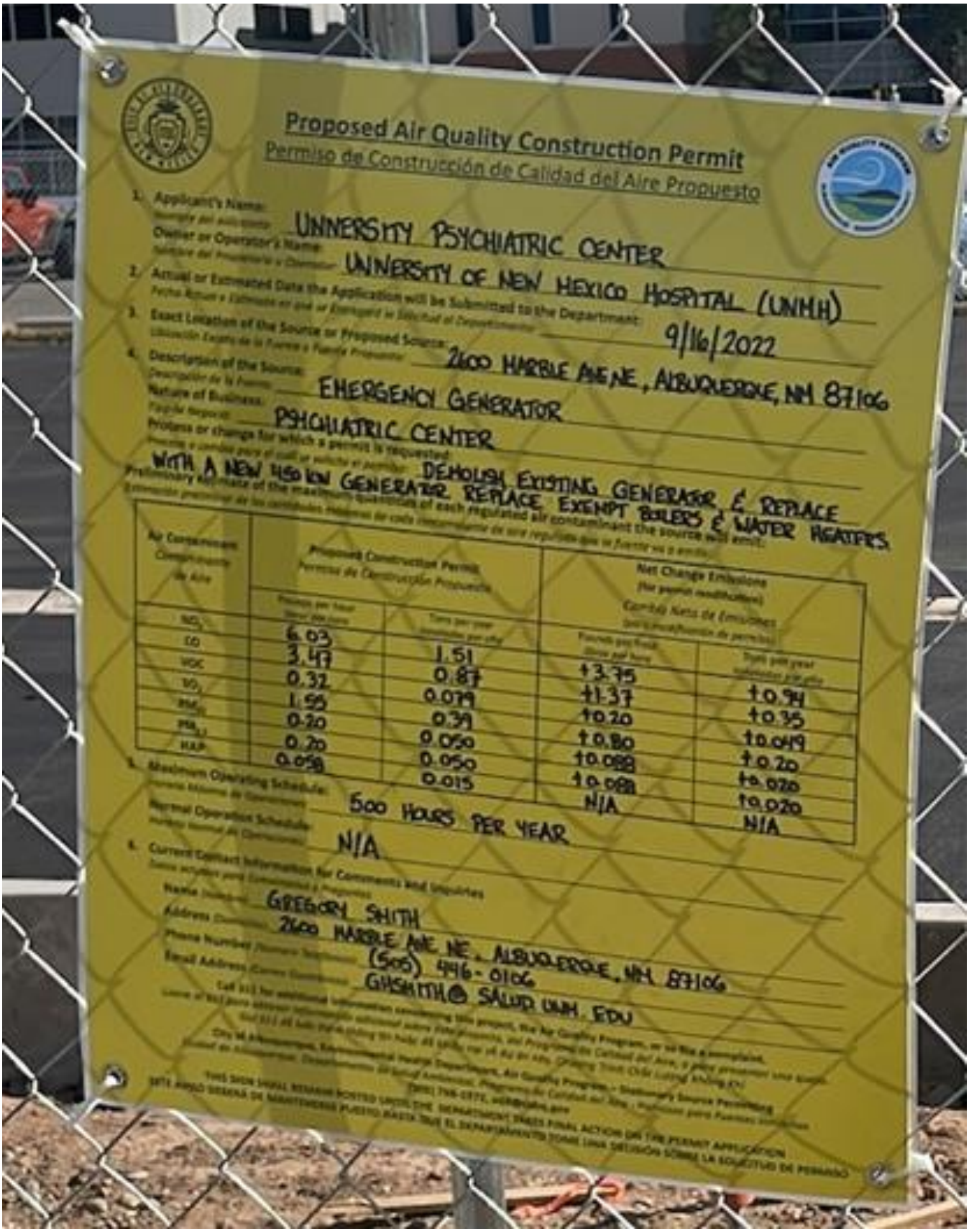

Proposed Air Quality Construction Permit

Permiso de Construcción de Calidad del Aire Propuesto

1. Applicant's Name: UNIVERSITY PSYCHIATRIC CENTER
   Owner or Operator's Name: UNIVERSITY OF NEW MEXICO HOSPITAL (UNMH)
2. Actual or Estimated Date the Application will be Submitted to the Department: 9/16/2022
3. Exact Location of the Source or Proposed Source: 2600 MARBLE AVE NE, ALBUQUERQUE, NM 87106
4. Description of the Source: EMERGENCY GENERATOR
   Nature of Business: PSYCHIATRIC CENTER
   Process or change for which a permit is requested: DEMOLISH EXISTING GENERATOR & REPLACE WITH A NEW 450 kW GENERATOR. REPLACE EXEMPT BOILERS & WATER HEATERS.
   Preliminary estimate of the maximum quantities of each regulated air contaminant the source will emit:

Air Contaminant	Proposed Construction Permit		Net Change Emissions	
	Pounds per hour	Tons per year	Pounds per hour	Tons per year
NO_x	6.03	1.51	+3.75	+0.94
CO	3.47	0.87	+1.37	+0.35
VOC	0.32	0.079	+0.20	+0.049
SO_2	1.55	0.39	+0.80	+0.20
PM_{10}	0.20	0.050	+0.088	+0.020
$PM_{2.5}$	0.20	0.050	+0.088	+0.020
HAP	0.058	0.015	N/A	N/A

5. Maximum Operating Schedule: 500 HOURS PER YEAR
   Normal Operation Schedule: N/A
6. Current Contact Information for Comments and Inquiries
   Name: GREGORY SMITH
   Address: 2600 MARBLE AVE NE, ALBUQUERQUE, NM 87106
   Phone Number: (505) 446-0106
   Email Address: GHSMITH@SALUD.UNM.EDU

THIS SIGN SHALL REMAIN POSTED UNTIL THE DEPARTMENT MAKES FINAL ACTION ON THE PERMIT APPLICATION

Proposed Air Quality Construction Permit
Permiso de Construcción de Calidad del Aire Propuesto
UNIVERSITY PSYCHIATRIC CENTER
UNIVERSITY OF NEW MEXICO HOSPITAL (UNMH)
9/16/2022
2100 HARDIE AVE NE, ALBUQUERQUE NM 87106
EMERGENCY GENERATOR
PSYCHIATRIC CENTER
500 HOURS PER YEAR
N/A
Proposed Air Quality Construction Permit
Permiso de Construcción de Calidad del Aire Propuesto
RESEARCH INCUBATOR BUILDING (RIB)
UNIVERSITY OF NEW MEXICO (UNM)
9/16/2022
2101 FRONTIER AVE NE, ALBUQUERQUE NM 87131
EMERGENCY GENERATOR
HIGHER EDUCATION
UPDATING EMISSION FACTORS
RELOCATION OF EXISTING EMERGENCY GENERATOR
200 HOURS PER YEAR
N/A
CARMEN HALL
SCHOLES HALL NO. 3100 10, 1800 SIGMA AVE, ALBUQUERQUE NM 87131
(505) 272-8305
CBHALL@UNM.EDU

APPENDIX D. FACILITY LOCATION AND AERIAL PHOTOGRAPH

Appendix Figure D-1: Facility Location

Appendix Figure D-2: Aerial Photograph of Process Locations

Appendix Figure D-1. Facility Location

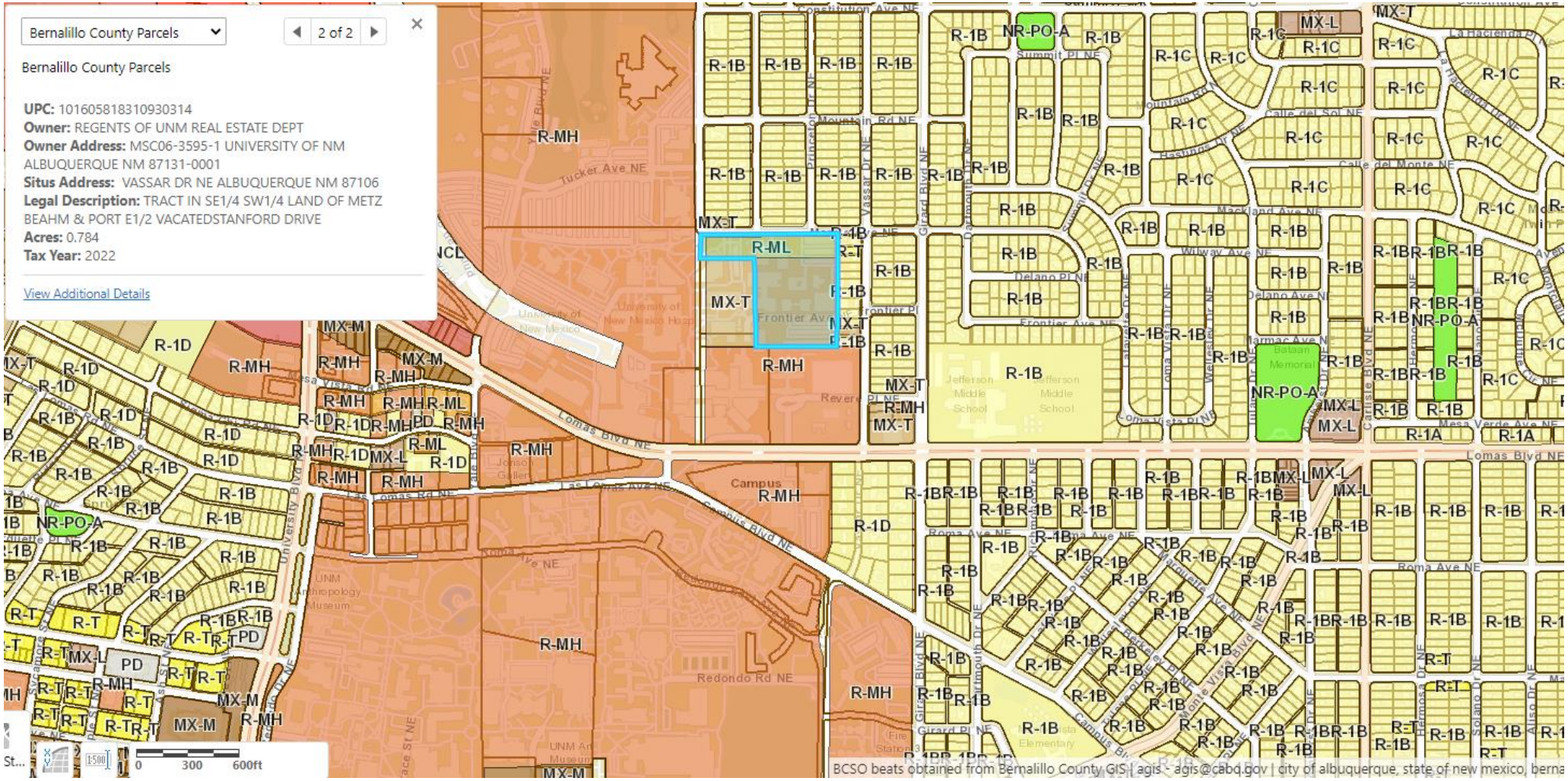
Bernalillo County Parcels
2 of 2
Bernalillo County Parcels
UPC: 101605818310930314
Owner: REGENTS OF UNM REAL ESTATE DEPT
Owner Address: MSC06-3595-1 UNIVERSITY OF NM ALBUQUERQUE NM 87131-0001
Situs Address: VASSAR DR NE ALBUQUERQUE NM 87106
Legal Description: TRACT IN SE1/4 SW1/4 LAND OF METZ BEAHM & PORT E1/2 VACATEDSTANFORD DRIVE
Acres: 0.784
Tax Year: 2022
View Additional Details
R-ML
MX-T
R-MH
R-1B
R-1C
R-1D
R-1A
NR-PO-A
MX-L
MX-M
PD
R-T
Lomas Blvd NE
Campus Blvd NE
Frontier Ave NE
Tucker Ave NE
Redondo Rd NE
Campus
0 300 600ft
BCSO beats obtained from Bernalillo County GIS | agis - agis@cabq.gov | city of albuquerque, state of new mexico, berna

Appendix Figure D-2. Aerial Photograph of Process Locations

University Psychiatric Center

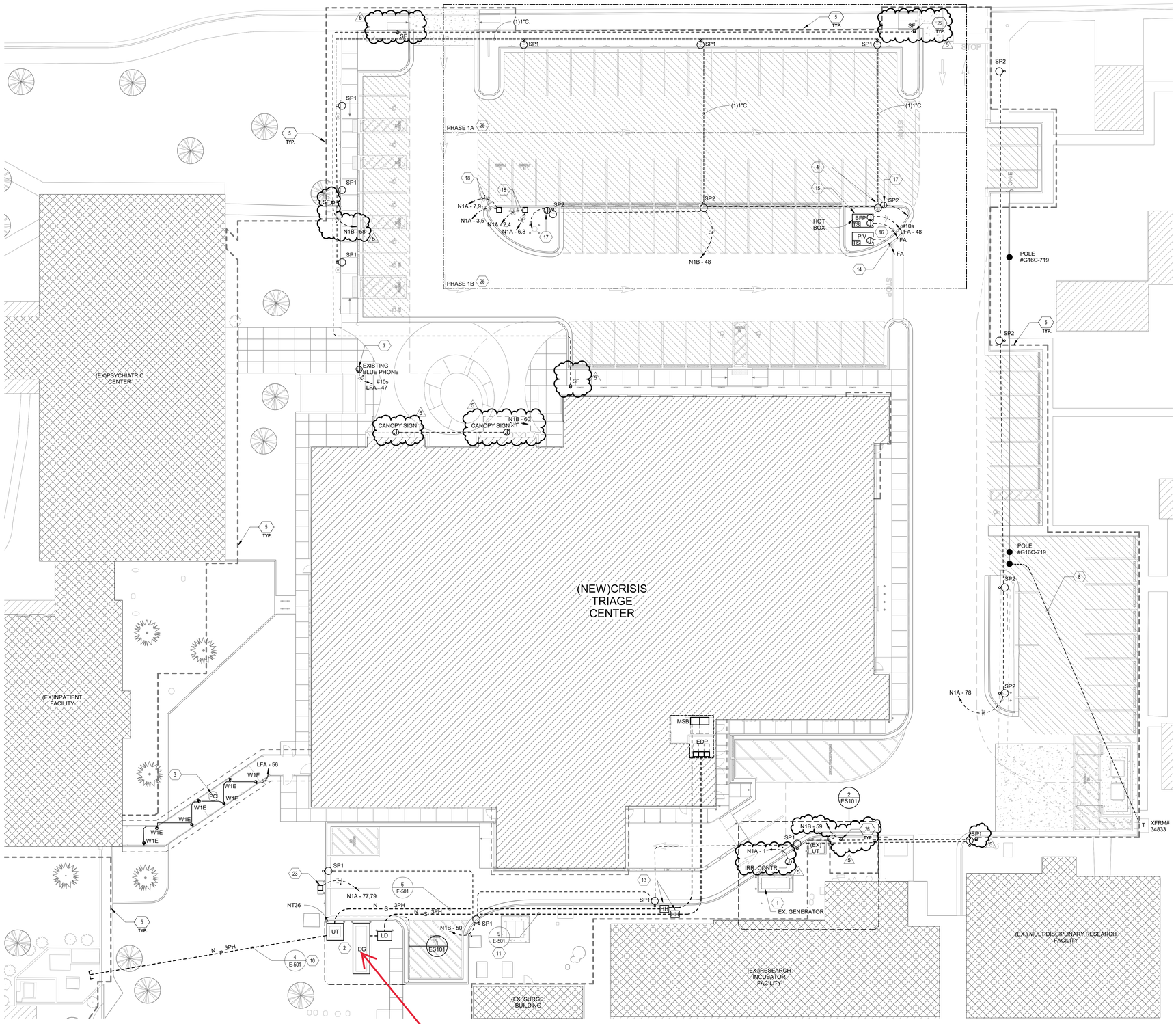

A1 ELECTRICAL SITE PLAN
1/16" = 1'-0"

GENERAL SHEET NOTES

A. EXTERIOR AND BUILDING MOUNTED LIGHTS TO BE CONTROLLED FROM ASTRONOMICAL TIMECLOCK AND LOW VOLTAGE CONTROL PHOTOCELL. RUN EXTERIOR LIGHTING CIRCUIT(S) THROUGH LIGHTING CONTROL RELAY PANEL. SET CONTROL PANEL TO TURN EXTERIOR LIGHTS ON WHEN NATURAL AMBIENT LIGHT LEVELS FALL BELOW 650 FOOTCANDLES.
B. REFER TO FIXTURE SCHEDULE SHEET E-701.
C. REFER TO SHEET EL101 FOR LIGHTING SEQUENCE OF OPERATIONS.

SHEET KEYNOTES

1. NEW LOCATION FOR EXISTING KOHLER GENERATOR. CONTRACTOR IS TO TEST THE GENERATOR BEFORE AND AFTER INSTALLATION TO ASSURE PROPER OPERATION (DOCUMENT FINDINGS). PROVIDE NEW HOUSE KEEPING CONCRETE PAD IN ACCORDANCE WITH MANUFACTURERE'S REQUIREMENTS, AND COORDINATE FINAL LOCATION WITH OWNER AND ARCHITECT PRIOR TO ROUGH IN.
2. NEW GENSET AND TRANSFORMER LOCATION WITH PROTECTION BOLLARDS. REFER TO ONE-LINE DIAGRAM FOR ADDITIONAL INFORMATION.
3. CONNECTOR PATH LIGHTING TO BE CONTROLLED BY PHOTOCELL SENSOR. COORDINATE PHOTOCELL PLACEMENT WITH VENDOR.
4. NEW POLE MOUNTED LIGHTING. SEE DETAIL 3/E-501 AND SCHEDULE E701.
5. LEED PROJECT BOUNDARY SHOWN HERE FOR REFERENCE.
6. PORTABLE GENERATOR QUICK CONNECT WITH PROTECTION BOLLARDS. REFER TO ONE-LINE DIAGRAM FOR ADDITIONAL INFORMATION.
7. EXISTING BLUE PHONE STATION TO BE REMOVED AND RE-INSTALLED IN SAME LOCATION. COORDINATE REQUIREMENTS WITH OWNER PRIOR TO COMMENCEMENT OF WORK.
8. PATH OF PROPOSED UG POWER LINE BY PNM. EXTEND CONDUIT FROM EXISTING POWER POLE G16C-71A. COORDINATE EXACT ROUTING WITH PNM AND OWNER PRIOR TO ROUGH IN. PROVIDE (1) 4" UNDERGROUND CONDUIT AND RISER PER PNM STANDARDS. REPAIR ASPHALT AS NEEDED.
9. IRRIGATION CONTROLLER. COORDINATE FINAL LOCATION AND REQUIREMENTS WITH OWNER AND VENDOR PRIOR TO ROUGH IN.
10. PROVIDE NEW UNDERGROUND 12,470V PRIMARY FEEDER FROM EXISTING SWITCH. PROVIDE (2)4" C. IN CONCRETED ENCASED DUCTBANK.
11. PROVIDE UNDERGROUND EMERGENCY FEEDER (208/120V) IN CONCRETED ENCASED DUCTBANK FROM GENERATOR TO CTC BUILDING. PROVIDE FEEDER FOR POWER AND (2) 1"C. FOR CONTROLS.
12. SECONDARY FEEDER FROM PAD-MOUNT TRANSFORMER TO ELECTRICAL GEAR. SEE PLAN EP101 AND SINGLE LINE DIAGRAM.
13. HAND HOLE BULL BOX. SEE DETAILS.
14. PROVIDE FIRE ALARM MONITORED TAMPER SWITCH ON POST INDICATOR VALVE. (PIV). PROVIDE (1) 1" CONDUIT TO FIRE ALARM PANEL IN BUILDING. COORDINATE WITH VENDOR AND OWNER.
15. POWER CONNECTION TO COMBINATION DOMESTIC WATER, FIRE PROTECTION & IRRIGATION WATER SERVICES HOT BOX HEATER. STUB UP UNDERGROUND AND PROVIDE WEATHERPROOF GFCI TYPE RECEPTACLE IN HOT BOX. COORDINATE WITH VENDOR AND OWNER.
16. PROVIDE FIRE ALARM MONITORED TAMPER SWITCH IN HOT BOX. PROVIDE (1) 1" CONDUIT TO FIRE ALARM PANEL IN BUILDING. COORDINATE WITH VENDOR AND OWNER.
17. DEVICE FOR POLE MOUNTED SURVEILLANCE CAMERA FILTER TO COPPER TRANSDUCER. REFER TO SHEET SERIES "T" FOR ADDITIONAL INFORMATION.
18. NEW LOCATION FOR ELECTRIC VEHICLE CHARGING STATION. INSTALL CHARGING STATION IN UNISTRUT. PROVIDE POWER AND TESTING PER MANUFACTURER'S DIRECTION. PROVIDE 2#6 & 1#10 G IN 1" CONDUIT FOR ELECTRICAL VEHICLE CHARGING STATION. COORDINATE EXACT CHARGING STATION LOCATION WITH ARCHITECT. PROVIDE CHARGE POINT #CT4000 LEVEL 2.
19. DEVICE IS FOR GENERATOR / LOADING DOCK AUXILIARY LOADS (I.E. HEATER, BATTERY, ETC.).
20. INTERCEPT EXISTING FEEDER SERVING THE AUXILIARY LOADS FOR THE EXISTING GENERATOR AND EXTEND TO NEW LOCATION AS SHOWN. MATCH CONDUCTOR AND CONDUIT SIZES AND RE-TERMINATE IN GENERATOR.
21. EXTEND (2)1"CONDUIT FROM EXISTING AUTOMATIC TRANSFER SWITCH TO RELOCATED KOHLER GENERATOR FOR ATS CONTROL. PROVIDE CONTROL WIRE TO EACH ATS BEING SERVED BY GENERATOR.
22. PROVIDE NEW FEEDER FROM EXISTING RELOCATED GENERATOR TO EDPA PANEL LOCATED IN THE RESEARCH INCUBATOR FACILITY ELECTRICAL ROOM. RUN FEEDER THROUGH EXISTING RAISED FLOOR IN ELECTRICAL ROOM. COORDINATE ROUTING WITH EXISTING SITE CONDITION.
23. RELOCATED AMBULANCE CHARGING STATION. COORDINATE REQUIREMENTS WITH OWNER PRIOR TO ROUGH IN.
24. INSTALLING AN AUXILIARY GROUNDING ELECTRODE FOR GENERATOR IS NOT AN NEC REQUIREMENT; HOWEVER, IF INSTALLED, THE INSTALLATION MUST MEET THE REQUIREMENTS OF 250.54.
25. PHASE 1A / 1B: PNM TO REINSTALL OLD POLE MOUNTED LIGHTS AND OVERHEAD CONDUCTORS ON NEW POLES FOR TEMPORARY LIGHTING. COORDINATE WITH PNM AND OWNER. PHASE. PROVIDE SITE LIGHTING "SP2" AND ASSOCAITED ELECTRICAL WORK IN PHASE TO MAINTAIN PARKING LOT OPEN AT ALL TIMES. STUB CONDUITS BACK TO CTC FOR AN EASY CONNECTION TO CTC POWER. COORDINATE WITH OWNER'S MASTER PLAN FOR PHASING.
26. GRADE MOUNT LED FLOOD LIGHT. COORDINATE REQUIREMENTS WITH MANUFACTURER, ARCHITECT AND OWNER PRIOR TO ROUGH IN.

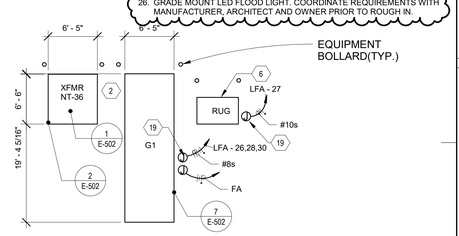

1 ENLARGED ELECTRICAL EQUIPMENT
SCALE: 1/8" = 1'-0"

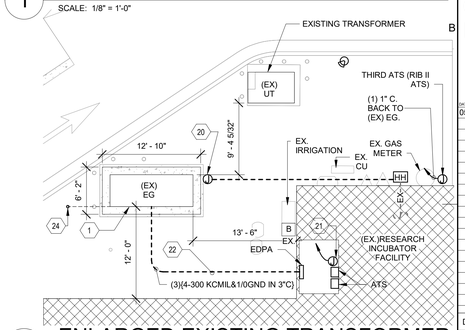

2 ENLARGED EXISTING TRANSFORMER
SCALE: 1/8" = 1'-0"

McCLAIN + YU
ARCHITECTURE & DESIGN
McClain + Yu Architecture & Design
2010 Ridgecrest Dr SE
Albuquerque, NM 87108
505.266.2142
info@mcclain-yu.com
www.mcclain-yu.com

DAVIS PARTNERSHIP ARCHITECTS
Davis Partnership Architects
2901 Blake Street, Suite 100
Denver, CO 80205
303.861.8555
www.davispartnership.com

CONSULTANTS
BRIDGERS & PAXTON
4600 C Montgomery Blvd. NE
Albuquerque, NM 87109 | 505.883.4111 | www.bpce.com
INNOVATIVE | DEPENDABLE | SOLUTIONS

OSCAR URIAS NEW MEXICO 25642 LICENSED PROFESSIONAL ENGINEER

PROJECT
CRISIS TRIAGE CENTER

OWNER
THE UNIVERSITY OF NEW MEXICO HOSPITALS

ADDRESS
2600 MARBLE AVE NE ALBUQUERQUE, NM 87106

PROJECT STATUS
CONSTRUCTION DOCUMENTS

DATE	NO.	DESCRIPTION
05/03/2022	5	Addendum 5

Date	MARCH 25, 2022
Project Number	2021-021
Project File	8362_MEP_UNMH Crisis Triage Center.rvt
Drawn By	Author
Checked By	Checker

Copyright ©
MCCLAIN + YU ARCHITECTURE AND DESIGN

SHEET TITLE
ELECTRICAL SITE PLAN

SHEET
ES101

Bridgers & Paxton Project No: 8362 5/3/2022 11:08:41 AM BIM 360://UNMH CRISIS TRIAGE CENTER/8362_MEP_UNMH Crisis Triage Center.rvt

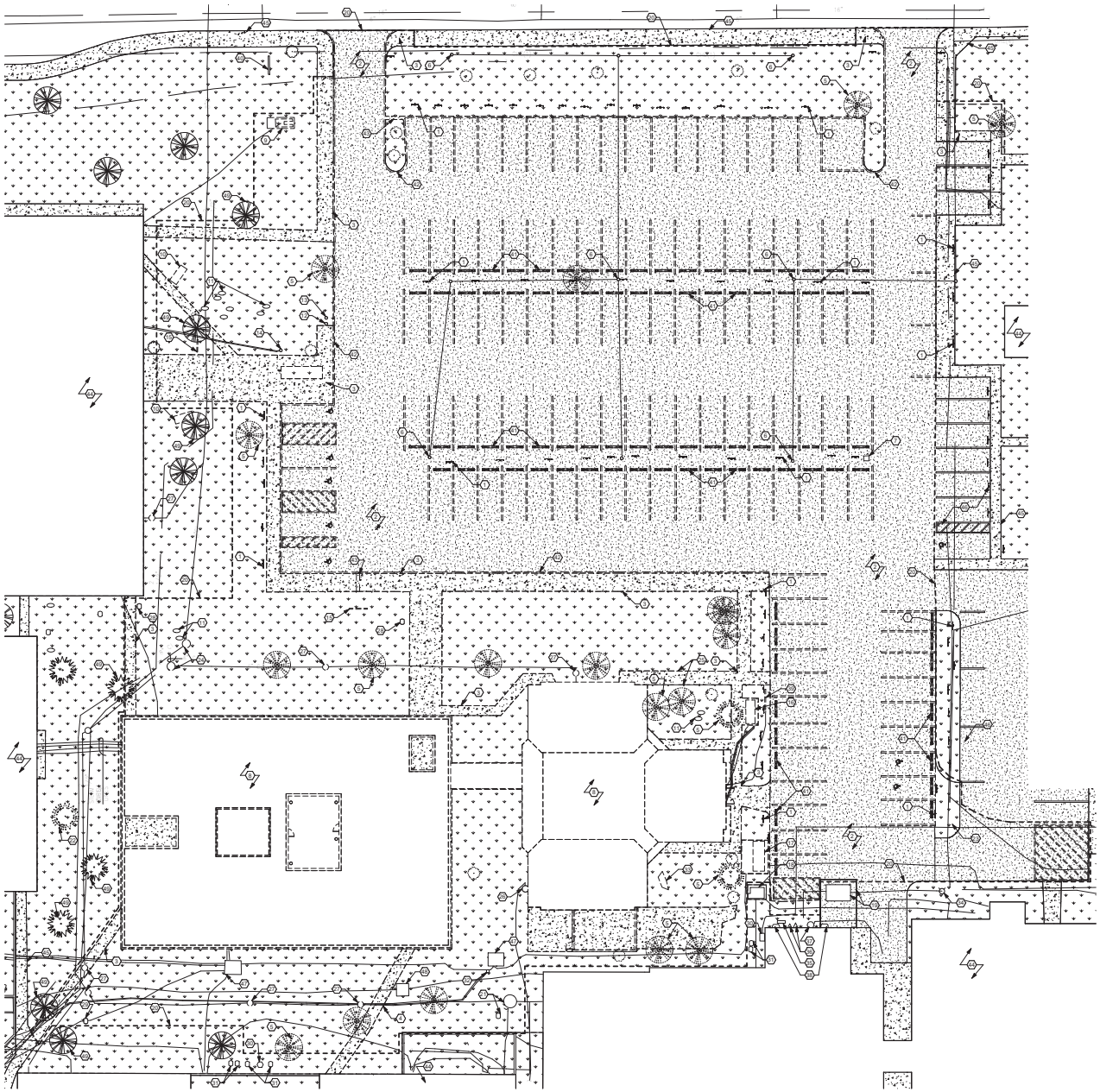

ENLARGED PLAN
1/16" = 1'-0"

0' 8' 16' 32' 64'

GENERAL SHEET NOTES

A. NONE

SHEET KEYNOTES

1 DEMO EXISTING PARKING SIGN - SALVAGE TO OWNER, TYP
2 DEMO EXISTING ASPHALT COMPLETE
3 DEMO EXISTING SIDEWALK COMPLETE
4 DEMO EXISTING PAVERS COMPLETE
5 DEMO EXISTING TREES COMPLETE - SEE LANDSCAPE
6 DEMO EXISTING WD LIGHT POLE COMPLETE
7 EXISTING PAY STATION - SALVAGE TO OWNER
8 DEMO EXISTING BLDG COMPLETE
9 DEMO EXISTING FLAG POLE, FOOTING AND LIGHTING COMPLETE
10 DEMO EXISTING STL BENCH AND FOOTING COMPLETE
11 DEMO EXISTING LANDSCAPE BOULDER, FLAGSTONE AND CONCRETE COMPLETE
12 DEMO EXISTING SIGN POLE COMPLETE
13 DEMO EXISTING MAIL STAND COMPLETE
14 DEMO EXISTING EMERGENCY STATION COMPLETE
15 DEMO EXISTING SIGN COMPLETE
16 DEMO EXISTING GENERATOR AND FOOTING COMPLETE
17 DEMO EXISTING GENERATOR FOOTING COMPLETE - REMOVE AND RELOCATE GENERATOR - SEE NEW PLANS
18 EXISTING ELEC TRANSFORMER AND FOOTING TO REMAIN - PROTECT
19 EXISTING TRASH COMPACTOR AND FENCE TO REMAIN - PROTECT
20 EXTENT OF WORK
21 ADJUST ELEVATION OF EXISTING UTILITIES TO MATCH NEW GRADE
22 DEMO EXISTING TREE N.I.C. - COORDINATE WITH OWNER
23 DEMO EXISTING PARTIAL PARKING ISLAND
24 RELOCATE EXISTING SAS MANHOLE
25 DEMO EXISTING CMU WALL COMPLETE
26 DEMO EXISTING GAS METER COMPLETE
27 RELOCATE EXISTING CLEAN OUT
28 DEMO EXISTING IRRIGATION VALVE COMPLETE
29 RELOCATE EXISTING COMMUNICATION PULL BOX
30 EXISTING WATER HOT BOX TO REMAIN
31 EXISTING IRRIGATION VALVE TO REMAIN
32 RELOCATE POST INDICATOR VALVE - SEE PLUMB
33 DEMO EXISTING STATUE COMPLETE
34 EXISTING FIRE HYDRANT TO REMAIN
35 EXISTING HVAC UNIT TO REMAIN
36 EXISTING WATER VALVE BOX TO REMAIN
37 EXISTING GAS METER TO REMAIN
38 EXISTING ELECTRICAL DISCONNECT SWITCH TO REMAIN
39 DEMO EXISTING ELECTRICAL VEHICLE CHARGING STATION
40 EXISTING METAL SIGN TO REMAIN
41 DEMO EXISTING WHEEL STOPS COMPLETE
42 DEMO EXISTING CONCRETE CURB AND GUTTER COMPLETE
43 DEMO EXISTING SIDEWALK CULVERT COMPLETE
44 EXISTING BUILDING TO REMAIN
45 EXISTING SIDEWALK TO REMAIN
46 EXISTING PARKING AND SIGNAGE TO REMAIN
47 EXISTING COMM VAULT COVER TO REMAIN
48 EXISTING ELECTRICAL VAULT TO REMAIN
49 EXISTING TREE TO REMAIN - PROTECT, SEE LANDSCAPING

LEGEND

DEMO
EXISTING TO REMAIN
LANDSCAPING
CONCRETE
ASPHALT

McCLAIN + YU ARCHITECTURE & DESIGN
McClain + Yu Architecture & Design
2010 Ridgecrest Dr SE
Albuquerque, NM 87108
505.266.2142
info@mcclain-yu.com
www.mcclain-yu.com

DAVIS PARTNERSHIP ARCHITECTS
Davis Partnership Architects
2901 Blake Street, Suite 100
Denver, CO 80205
303.861.8555
www.davispartnership.com

CONSULTANTS

PROJECT
CRISIS TRIAGE CENTER

OWNER
THE UNIVERSITY OF NEW MEXICO HOSPITALS

ADDRESS
2600 MARBLE AVE NE
ALBUQUERQUE, NM 87106

PROJECT STATUS
SCHEMATIC DESIGN

DATE	NO.	DESCRIPTION

Date	09/01/2021
Project Number	2021-021
Project File	
Drawn By	CM
Checked By	RB, RM

Copyright ©
McCLAIN + YU ARCHITECTURE AND DESIGN

SHEET TITLE
ENLARGED DEMO SITE PLAN

SHEET
ASD102

BIM 360://UNMH CRISIS TRIAGE CENTER/UNMH CRISIS TRIAGE_studio04ZKHP8.rvt
8/31/2021 3:13:23 PM

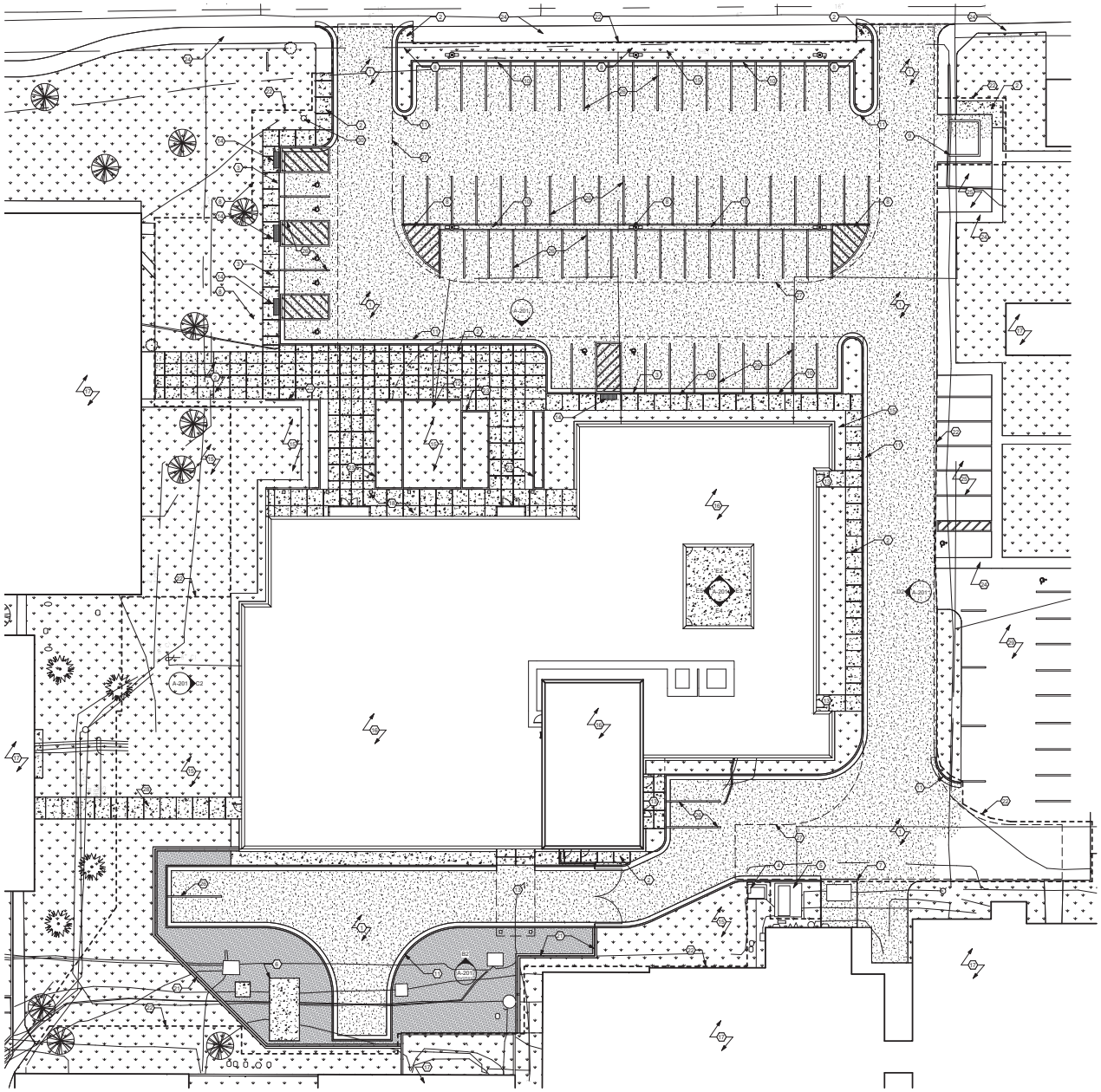

A1 ENLARGED PLAN
1/16" = 1'-0"

0' 8' 16' 32' 64'

GENERAL SHEET NOTES

A. NONE

SHEET KEYNOTES

1 PAVED PARKING AND STRIPPING
2 CONCRETE SIDWALK - SEE DETAILS
3 ADA PARKING SIGN
4 EXISTING TRANSFORMER AND FOOTING TO REMAIN - PROTECT
5 RELOCATED GENERATOR W/ NEW FOOTING
6 CONCRETE SLAB AND GENERATOR
7 EXISTING TRASH COMPACTOR AND FENCE TO REMAIN - PROTECT
8 LIGHT POLE - SEE DETAILS AND ELEC
9 TRASH ENCLOSURE - SEE DETAILS
10 PARKING SIGNAGE
11 CURB AND GUTTER
12 BUILDING SIGN
13 CANTILEVER ENTRY CANOPY - ADHERED TPO ROOF SYSTEM, FASCIA CLADDED IN 10MM PHENOLIC PANEL SYSTEM W/ CONCEALED FASTENERS - COLOR 1
14 DETECTABLE WARNING SURFACE
15 LANDSCAPING
16 FULLY ADHERED TPO ROOF SYSTEM
17 EXISTING BUILDING TO REMAIN
18 FREE STANDING ENTRY CANOPY - ADHERED TPO ROOF SYSTEM, FASCIA CLADDED IN 10MM PHENOLIC PANEL SYSTEM W/ CONCEALED FASTENERS - COLOR 1
21 8' SECURITY FENCE AND GATE
22 EXTENT OF WORK
23 CONCRETE WALL
24 EXISTING SIDEWALK TO REMAIN
25 EXISTING PARKING AND SIGNAGE TO REMAIN
26 STRIPPING - SEE CIVIL
27 FIRE APPARATUS ROUTE STRIPPING - SEE CIVIL
28 CONCRETE SIDWALK N.I.C - COORDINATE WITH OWNER
29 EXISTING PARKING AND SIGNAGE TO REMAIN - RE-STRIPPING
30 FIRE HYDRANT - SEE CIVIL

LEGEND

LANDSCAPING
CONCRETE
ASPHALT
GRAVEL

McCLAIN + YU ARCHITECTURE & DESIGN
McClain + Yu Architecture & Design
2010 Ridgecrest Dr SE
Albuquerque, NM 87108
505.266.2142
info@mcclain-yu.com
www.mcclain-yu.com

DAVIS PARTNERSHIP ARCHITECTS
Davis Partnership Architects
2901 Blake Street, Suite 100
Denver, CO 80205
303.861.8555
www.davispartnership.com

CONSULTANTS

PROJECT
CRISIS TRIAGE CENTER

OWNER
THE UNIVERSITY OF NEW MEXICO HOSPITALS

ADDRESS
2600 MARBLE AVE NE
ALBUQUERQUE, NM 87106

PROJECT STATUS
SCHEMATIC DESIGN

DATE	NO.	DESCRIPTION

Date	09/01/2021
Project Number	2021-021
Project File	
Drawn By	CM
Checked By	RB, RM

Copyright ©
McCLAIN + YU ARCHITECTURE AND DESIGN

SHEET TITLE
ENLARGED SITE PLAN

SHEET
AS102

8/31/2021 3:13:19 PM BIM 360://UNMH CRISIS TRIAGE CENTER/UNMH CRISIS TRIAGE_studio042KHP8.rvt

APPENDIX E. ZONING REQUIREMENTS

Based upon review of applicable New Mexico laws and certain Attorney General Options, the University's use, and proposed use, of the Proposed Property is not subject to local zoning ordinances. Specifically, Article XII, Section 3 of the New Mexico Constitution states that:

> " *The schools, colleges, university and other institutions provided for by this constitution shall forever remain under the exclusive control of the state, and no part of the proceeds arising from the sale or disposal of any lands granted to the state by congress, or any other funds appropriated, levied or collected for educational purposes shall be used for the support of any sectarian, denominated or private school, college or university."*

In turn, Article XII, Section 11 of the New Mexico Constitution establishes and designates the University as state educational institution, Article XII, Section 13 provides that the "legislature shall provide for the control and management of the university of New Mexico by a board of regents…" Pursuant to NMSA 1978, § 21-7-3, "[t]he management and control of the university of New Mexico, the care and preservation of all its property, the erection and construction of all buildings necessary for its use and the disbursements and expenditures of all money shall be vested in a board of seven regents." The New Mexico Attorney General has held that the University is not subject to local municipal ordinances unless the legislature has specifically ceded its control to the municipality. See N.M. Op. AG No. 69-48. To date, the New Mexico legislature has not conceded such control with respect to land use zoning. A copy of N.M. Op. AG No. 69-48 is attached to this letter.

The above and attached documentation in this section note that UNMH is not subject to City of Albuquerque or Bernalillo County ordinances. As a formality, verifications from both Bernalillo County and the City of Albuquerque are included in this section.

Steve Niskanen

From: Tom Kay <tkay@bernco.gov>
Sent: Wednesday, June 29, 2022 11:46 AM
To: Steve Niskanen
Cc: Enrico D Volpato (edvolpato@salud.unm.edu); MK Rocky Kearney; Douglas J Brooks; Mike Celente
Subject: RE: UNMH NHT - Request for Zoning Verification

> You don't often get email from tkay@bernco.gov. Learn why this is important

Steve,

1919 Lomas and the University of New Mexico Hospital fall within the city limits of Albuquerque and is outside the zoning jurisdiction of Bernalillo County Zoning. This project will not be subject to Bernalillo County Zoning regulations.

If you have additional questions, please let us know,

Tom

Tom Kay
Zoning Enforcement Manager
Planning and Development Services Department
415 Silver Ave SW 2nd floor Albuquerque NM 87102
Email: tkay@bernco.gov
O: (505) 314-0396 C: (505) 350-1432
www.bernco.gov

From: Steve Niskanen <sniskanen@broaddususa.com>
Sent: Tuesday, June 28, 2022 4:24 PM
To: Zoning <Zoning@bernco.gov>
Cc: Enrico D Volpato (edvolpato@salud.unm.edu) <edvolpato@salud.unm.edu>; MK Rocky Kearney <mkkearney@salud.unm.edu>; Douglas J Brooks <dobrooks@salud.unm.edu>; Mike Celente <MCelente@trinityconsultants.com>
Subject: UNMH NHT - Request for Zoning Verification

> Some people who received this message don't often get email from sniskanen@broaddususa.com. Learn why this is important

CAUTION: This email originated from outside of Bernalillo County. Do not click links or open attachments unless you recognize the sender and know the content is safe.

Dear Bernalillo County Zoning Department,

The City of Albuquerque recently added a new Zoning Verification step to their air permit process, which is the reason we are contacting you today. For context, please refer to the attached WORD document which we need to submit to the Environmental Health Department at the city. We are working with our Air Permit Consultant (Trinity/ Mike Celente) to secure a permit to operate new equipment associated with our new Central Utility Plant that will support the new Hospital we are constructing at 1919 Lomas.

Please review the attached PDF and confirm to Enrico copied here that the University of New Mexico Hospital is not subject to Bernalillo County zoning requirements. I am serving as the Program Manager and will be happy to answer any questions you may have. For expediency, please send the completed form back to all those copied here – thanks.

Best,

Steve Niskanen, CCM, MBA, LEED AP
Program Manager – Vice President
Broaddus & Associates
Cell: 832-948-9418

THE BROADDUS COMPANIES
We exist to advocate for owners and dramatically improve the building process

IT IS CRITICAL you exercise extreme caution opening any office documents attached to email - Be wary of unsolicited attachments

CITY OF ALBUQUERQUE

CODE ENFORCEMENT
Plaza Del Sol Building, Suite 500
600 2nd Street NW
Albuquerque, NM 87102
Tel: (505) 924-3850 Fax: (505) 924-3847

Date: August 31, 2022

VIA Email, mcelente@trinityconsultants.com
Michael Celente
9400 Holly Ave. NE Bldg. 3, Suite B
ABQ, NM 87122

RE: VASSAR DR NE – the "property".
UPC: 101605818310930314

To Whom It May Concern:

This letter will certify that according to the map on file in this office on August 31, 2022, the property located at: **VASSAR DR NE**, legally described as: **TRACT IN SE1/4 SW1/4 LAND OF METZ BEAHM & PORT E1/2 VACATEDSTANFORD DRIVE,** Albuquerque, Bernalillo County, New Mexico, is Zoned: R-ML Residential - Multi-family Low Density Zone District.

If you have any questions regarding this matter please feel free to contact code enforcement by email at codeenforcement@cabq.gov

Sincerely:

Angelo Metzgar
Code Compliance Manager

January 29, 2021

Geoffrey Papsco
Director, Office of Hospital Facilities
U.S. Department of Housing and Urban Development
26 Federal Plaza, Room 32-102
New York, New York 10278

RE: University of New Mexico Hospitals ("Hospital")
2211 Lomas Avenue, N.E.
Albuquerque, New Mexico 87106

Dear Mr. Papsco:

I am the Deputy University Counsel for Health Sciences in the Office of University Counsel and we are in-house counsel to the Regents of the University of New Mexico (the "University" or "UNM"), for its public operation known as the University of New Mexico Hospitals, and have been requested by our client to provide the U.S. Department of Housing and Urban Development ("HUD") with a legal description of the real property (the "Proposed Mortgaged Property") that will be encumbered by the HUD-insured mortgage in connection with the proposed loan to be made by Wells Fargo Bank, National Association to Hospital, and which will be insured by HUD pursuant to Section 242 and Section 241 of the National Housing Act.

The Proposed Mortgaged Property is described in Exhibit A attached hereto and may be viewed pictorially as shown in the ALTA/ASCM Land Surveys prepared Bohannon Houston, a copy of which are attached as Exhibit B (the "Land Survey"). Based on our review of the Title Report dated January 11, 2021 prepared by Stewart Title (the "Title Report") and the Land Survey, the University owns certain portions of the Proposed Mortgaged Property in fee simple (subject to the mortgage and easements identified in the Title Report) and holds a leasehold interest in certain portions of the Proposed Mortgaged Property (subject to the leasehold mortgage identified in the Title Report) as described and characterized more fully in the attached Title Report. Based upon our reasonable inquiry and reliance on representations made to us by the University and the Hospital, we are not aware of any transactions, transfers, conveyances, mortgages, or liens placed on the Proposed Mortgaged Property between the date of the Title Report and the date of this letter that would indicate that the Hospital does not own the Proposed Mortgaged Property either in fee simple or as a leasehold.

We understand that HUD requires an opinion as to whether the University use, and proposed use, of the Proposed Mortgaged Property complies with local zoning ordinances. In this connection, based upon our review of applicable New Mexico law and certain Attorney General Opinions, the University's use, and proposed use, of the Proposed Mortgaged Property is not subject to local zoning ordinances. Specifically, Article XII, Section 3 of the New Mexico Constitution states that:

> *The schools, colleges, university and other institutions provided for by this constitution shall forever remain under the exclusive control of the state*, and no part of the proceeds arising from the sale or disposal of any lands granted to the state by congress, or any other funds appropriated, levied or collected for educational purposes, shall be used for the support of any sectarian, denominational or private school, college or university.

In turn, Article XII, Section 11 of the New Mexico Constitution establishes and designates the University as a state educational institution. Article XII, Section 13 provides that the "legislature shall provide for the control and management of the university of New Mexico by a board of regents . . . ." Pursuant to NMSA 1978, § 21-7-3, "[t]he management and control of the university of New Mexico, the care and preservation of all its property, the erection and construction of all buildings necessary for its use and the disbursements and expenditures of all money shall be vested in a board of seven regents." The New Mexico Attorney General has held that the University is not subject to local municipal ordinances unless the legislature has specifically ceded its control to the municipality. *See* N.M. Op. AG No. 69-48. To date, the New Mexico legislature has not conceded such control with respect to land use zoning. A copy of N.M. Op. AG No. 69-48 is attached to this letter.

As stated previously, the University was established and designated as s state educational institution pursuant to Article XII, Section 11 of the New Mexico Constitution. See also NMSA 1978, § 21-7-1. Pursuant to NMSA 1978, § 21-7-3, "[t]he management and control of the university of New Mexico, the care and preservation of all its property, the erection and construction of all buildings necessary for its use and the disbursements and expenditures of all money shall be vested in a board of seven regents." And, NMSA 1978, § 21-7-4, provides that "[t]he regents of the university and their successors in office shall constitute a body corporate under the name and style of, the regents of the university of New Mexico, with the right, as such, of suing and being sued, or contracting and being contracted with, of making and using a common seal and altering the same at pleasure." As a result, the University does not have organizational documents as would a corporation, profit or non-profit. The Board of Regents does promulgate Regents Policies, which govern both the operations of the Board of Regents as well as the operations of the University. Those policies are publicly available at https://policy.unm.edu/regents-policies/index.html.

Very truly yours,

Scot Sauder, Esq.
Deputy University Counsel for
Health Sciences

Go to previous versions of this Section

2021 New Mexico Statutes Chapter 3 - Municipalities Article 21 - Zoning Regulations Section 3-21-1 - Zoning; authority of county or municipality.

Universal Citation: NM Stat § 3-21-1 (2021)

A. For the purpose of promoting health, safety, morals or the general welfare, a county or municipality is a zoning authority and may regulate and restrict within its jurisdiction the:

(1) height, number of stories and size of buildings and other structures;

(2) percentage of a lot that may be occupied;

(3) size of yards, courts and other open space;

(4) density of population; and

(5) location and use of buildings, structures and land for trade, industry, residence or other purposes.

B. The county or municipal zoning authority may:

(1) divide the territory under its jurisdiction into districts of such number, shape, area and form as is necessary to carry out the purposes of Sections 3-21-1 through 3-21-14 NMSA 1978; and

to a limited number of parties does not mean that the zoning action is necessarily quasi-judicial in nature. The fact that a particular party's proposed development or a particular parcel is in the mind of the zoning authority when it takes action does not change the nature of the zoning authority's decision from legislative to quasi-judicial. *Albuquerque Commons P'ship v. Albuquerque City Council*, 2006-NMCA-143, 140 N.M. 751, 149 P.3d 67, *rev'd*, 2008-NMSC-025, 144 N.M. 99, 184 P.3d 411.

The uniformity requirement does not prohibit different classifications within a district so long as they are reasonable and based on the public policy to be served. *Albuquerque Commons P'ship v. Albuquerque City Council*, 2006-NMCA-143, 140 N.M. 751, 149 P.3d 67, *rev'd*, 2008-NMSC-025, 144 N.M. 99, 184 P.3d 411.

When a zoning resolution is in substance an ordinance or a permanent regulation, the name given to the resolution is immaterial, and if it is passed with all the formality of an ordinance, the resolution thereby becomes a legislative act. *Albuquerque Commons P'ship v. Albuquerque City Council*, 2006-NMCA-143, 140 N.M. 751, 149 P.3d 67, *rev'd*, 2008-NMSC-025, 144 N.M. 99, 184 P.3d 411.

Comprehensive scheme to regulate land. — The Zoning Act affords counties a comprehensive scheme to regulate land use as a way to protect public health, safety and welfare. *Cerrillos Gravel Products, Inc. v. Santa Fe Bd. of Cnty. Comm'rs*, 2005-NMSC-023, 138 N.M. 126, 117 P.3d 932.

Definition of zoning. — Zoning is defined as governmental regulation of the uses of land and buildings according to districts or zones. When used to promote the public interest, it is justified and has been upheld as a legitimate exercise of the police power. New Mexico has specifically approved its use to protect and promote the safety, health, morals and general welfare. *Miller v. City of Albuquerque*, 1976-NMSC-052, 89 N.M. 503, 554 P.2d 665.

County's authority to promulgate zoning ordinances must come from enabling legislation from the state legislature, and therefore, any exercise of power under a zoning ordinance must be authorized by statute. *Burroughs v. Board of Cnty. Comm'rs*, 1975-NMSC-051, 88 N.M. 303, 540 P.2d 233.

As municipality has no zoning authority beyond that provided by this article. *Mechem v. City of Santa Fe*, 1981-NMSC-104, 96 N.M. 668, 634 P.2d 690; *City of Santa Fe v. Armijo*, 1981-NMSC-102, 96 N.M. 663, 634 P.2d 685.

751, 149 P.3d 67, *rev'd*, 2008-NMSC-025, 144 N.M. 99, 184 P.3d 411.

IV. DOWN ZONING.

Downzoning defined. — The characteristic common to all downzoning actions is that they focus on specific properties or small groups of properties within an otherwise similarly situated class, restricting or allowing uses in ways that do not apply to the surrounding area or similar areas within a municipality. *Albuquerque Commons v. Albuquerque City Council*, 2008-NMSC-025, 144 N.M. 99, 184 P.3d 411, *rev'g*, 2006-NMCA-143, 140 N.M. 751, 149 P.3d 67.

Common characteristic of downzoning. — Where the city council adopted a text amendment to a sector plan as a legislative action to create a new sub-zone within the sector plan area, which consisted of three parcels comprising six percent of the sector plan area and to impose additional, significantly more restrictive regulations that were applicable only to the new sub-zone, the amendment was a downzoing of property in the new sub-zone and a quasi-judicial action that denied the property owners in the sub-zone due process of law. *Albuquerque Commons v. Albuquerque City Council*, 2008-NMSC-025, 144 N.M. 99, 184 P.3d 411, *rev'g*, 2006-NMCA-143, 140 N.M. 751, 149 P.3d 67.

No down-zoning. — Where zoning text amendments were consistent with city's master plan, quantified and made more specific the city's policy vision to assure development of an urban center as stated in its comprehensive plan and in the prior zoning provisions and delineated how that vision would specifically come to pass in future development, and the changes applied to all property owners within the district, the zoning text amendments did not constitute a down-zoning and were legislative in nature. *Albuquerque Commons P'ship v. Albuquerque City Council*, 2006-NMCA-143, 140 N.M. 751, 149 P.3d 67, *rev'd*, 2008-NMSC-025, 144 N.M. 99, 184 P.3d 411.

V. STATE AND FEDERAL IMMUNITY.

Immunity of state. — The state is immune from any municipal zoning regulations. *City of Albuquerque v. Jackson Bros. Inc.*, 1991-NMCA-140, 113 N.M. 149, 823 P.2d 949.

Test to determine whether one political subdivision of the state is immune from the zoning laws of a co-equal political subdivision of the state. — In zoning and land use disputes between co-equal political subdivisions of the state, the statutory guidance test applies to determine whether a land use proposed by one political subdivision of the state may be prohibited by the zoning regulation of another. Under the statutory guidance test, courts review the statutory powers assigned to each entity to ascertain

whether the legislature intended that one entity's local zoning ordinances apply to the other entity's activities. *Village of Logan v. Eastern N.M. Water Util. Auth.*, 2015-NMCA-103.

In zoning and land use dispute between a municipality and a water utility authority, both of which are political subdivisions of the state established by legislative processes, the legislative purpose behind the creation of the water utility authority would be frustrated by requiring it to adhere to municipal zoning ordinances, and therefore the statutory guidance test applies to immunize the water utility authority from the municipality's zoning ordinances. *Village of Logan v. Eastern N.M. Water Util. Auth.*, 2015-NMCA-103.

State governmental body is not subject to local zoning regulations or restrictions. *City of Santa Fe v. Armijo*, 1981-NMSC-102, 96 N.M. 663, 634 P.2d 685.

County may not regulate a private entity on state land operating with the state's approval. *County of Santa Fe v. Milagro Wireless, LLC*, 2001-NMCA-070, 130 N.M. 771, 32 P.3d 214.

VI. DUE PROCESS AND TAKING ISSUES.

State-created substantive property right. — Where a municipality downzoned the landowner's property by map amendment; state case law required the municipality to establish a mistake in the original zoning or subsequent changed conditions in the neighborhood before the zoning could be legally changed; and a municipal resolution required the municipality to demonstrate that a mistake had occurred in the original zoning, that changed neighborhood or community conditions justify the change, or that a different use category is more advantageous to the community before a zoning classification could be changed by map amendment, the property owner had a state-created property right to continued zoning classification of the landowner's property unless the municipality justified the zoning change in accordance with the criteria of state case law and the municipal resolution. *Albuquerque Commons P'ship v. Albuquerque City Council*, 2009-NMCA-065, 146 N.M. 568, 212 P.3d 1122, cert. granted, 2009-NMCERT-007, 147 N.M. 363, 223 P.3d 360 and cert. denied, 1305 S.Ct. 1501, 176 L.Ed. 2d 110 (2010).

Property deprivation or due process violation. — Where state case law and a municipal resolution required the municipality to establish the substantive criteria of change, mistake or a more advantageous use category before changing the zoning classification of property, the failure of the municipality to actually establish one of the substantive criteria does not lead to a property deprivation or due process violation, the deprivation or violation only arises in the event the landowner is denied notice or a