Application Received September 21, 2022
cgmd

CABQ ENVIRONMENTAL HEALTH DEPARTMENT AIR QUALITY PROGRAM

PERMIT MODIFICATION APPLICATION

SUMCO Phoenix Corporation
Albuquerque Facility

Prepared By:

Jeff Homer – Corporate Director, EHS
Rafael Velazquez – EHS Manager

SUMCO Phoenix Corporation
19801 North Tatum Blvd
Phoenix, AZ 85233
(480) 473-6503
(480) 473-6563

Adam Erenstein – Manager of Consulting Services

TRINITY CONSULTANTS
9400 Holly Ave NE
Building 3, Suite B
Albuquerque, NM 87122
(505) 266-6611

September 2022

Project 223201.0147

Trinity Consultants

9400 Holly Ave NE, Bldg 3, Ste B, Albuquerque, NM 87122 / P 505.266.6611 / **trinityconsultants.com**

September 21, 2022

Ms. Carina G. Munoz-Dyer
Air Quality Permitting Division
Environmental Health Department
PO Box 1293
Albuquerque, NM 87103

Re: 20.11.41 NMAC AND 20.11.41 NMAC Permit Modification Application – SUMCO Phoenix Corporation Albuquerque Facility

Dear Ms. Munoz-Dyer,

On behalf of the SUMCO Phoenix Corporation we are submitting a revised Permit Modification application to modify Authority-to-Construct (ATC) Permit #0444-M4 for their Albuquerque Facility.

To support the processing of wafers, this application requests that the anhydrous hydrogen chloride chemical usage be updated to account for an increase in throughput from 122,385 lb/yr to 225,000 lb/yr. Per our initial conference call on September 2, 2022, because we are only seeking an increase in the amount of purchased anhydrous hydrogen chloride and will remain significantly below major source thresholds with abatement, modeling isn't needed.

The format and content of this submittal are consistent with the Air Quality Program's current policy regarding permit revision applications; it is a complete application package using the most current forms. Enclosed is one hard copy of the of the application form, the review fee form, all application attachments, and the application fee check. Please feel free to contact me at aerenstein@trinityconsultants.com if you have any questions regarding this application.

Thank you for your time and consideration,

TRINITY CONSULTANTS

Adam Erenstein
Manager of Consulting Services

Trinity Project File: 223201.0147

Application Forms

Trinity Consultants

City of Albuquerque
Environmental Health Department
Air Quality Program

Construction Permit (20.11.41 NMAC)
Application Checklist

This checklist must be returned with the application

Any person seeking a new air quality permit, a permit modification, or an emergency permit under 20.11.41 NMAC (Construction Permits) shall do so by filing a written application with the Albuquerque-Bernalillo County Joint Air Quality Program, which administers and enforces local air quality laws for the City of Albuquerque ("City") and Bernalillo County ("County"), on behalf of the City Environmental Health Department ("Department").

The Department will rule an application administratively incomplete if it is missing or has incorrect information. The Department may require additional information that is necessary to make a thorough review of an application, including but not limited to technical clarifications, emission calculations, emission factor usage, additional application review fees if any are required by 20.11.2 NMAC, and new or additional air dispersion modeling.

If the Department has ruled an application administratively incomplete three (3) times, the Department will deny the permit application. Any fees submitted for processing an application that has been denied will not be refunded. If the Department denies an application, a person may submit a new application and the fee required for a new application. The applicant has the burden of demonstrating that a permit should be issued.

The following are the minimum elements that shall be included in the permit application before the Department can determine whether an application is administratively complete and ready for technical review. It is not necessary to include an element if the Department has issued a written waiver regarding the element and the waiver accompanies the application. However, the Department shall not waive any federal requirements.

At all times before the Department has made a final decision regarding the application, an applicant has a duty to promptly supplement and correct information the applicant has submitted in an application to the Department. The applicant's duty to supplement and correct the application includes but is not limited to relevant information acquired after the applicant has submitted the application and additional information the applicant otherwise determines is relevant to the application and the Department's review and decision. While the Department is processing an application, regardless of whether the Department has determined the application is administratively complete, if the Department determines that additional information is necessary to evaluate or make a final decision regarding the application, the Department may request additional information and the applicant shall provide the requested additional information.

NOTICE REGARDING PERMIT APPEALS: A person who has applied for or has been issued an air quality permit by the Department shall be an obligatory party to a permit appeal filed pursuant to 20.11.81 NMAC.

NOTICE REGARDING SCOPE OF A PERMIT: The Department's issuance of an air quality permit only authorizes the use of the specified equipment pursuant to the air quality control laws, regulations and conditions. Permits relate to air quality control only and are issued for the sole purpose of regulating the emission of air contaminants from said equipment. Air quality permits are not a general authorization for the location, construction and/or operation of a facility, nor does a permit authorize any particular land use or other form of land entitlement. It is the applicant's/permittee's responsibility to obtain all other necessary permits from the appropriate agencies, such as the City Planning Department or County Department of Planning and Development Services, including but not limited to site plan approvals, building permits, fire department approvals and the like, as may be required by law for the location, construction and/or operation of a facility. For more information, please visit the City Planning Department website at https://www.cabq.gov/planning and the County Department of Planning and Development Services website at https://www.bernco.gov/planning.

The Applicant shall:

20.11.41.13(A) NMAC – Pre-Application Requirements:

Item	Completed	NA[1]	Waived[2]
(1) Request a pre-application meeting with the Department using the pre-application meeting request form.	☒	☐	☐
(2) Attend the pre-application meeting. Date of Pre-application meeting:	☒	☐	☐

1. *Not Applicable*
2. *It is not necessary to include an element if the Department has issued a written waiver regarding the element and the waiver accompanies the application. However, the Department shall not waive any federal requirements.*

20.11.41.13(B) NMAC – Applicant's Public Notice Requirements:

Item	Included in Application	NA[1]	Waived[2]
(1) Provide public notice in accordance with the regulation, including by certified mail or electronic copy to the designated representative(s) of the recognized neighborhood associations and recognized coalitions that are within one-half mile of the exterior boundaries of the property on which the source is or is proposed to be located.	☒	☐	☐
• Contact list of representative(s) of neighborhood associations and recognized coalitions cannot be more than three months old from the application submittal date.	☒	☐	☐
• Provide notice using the Notice of Intent to Construct form.	☒	☐	☐
(2) In accordance with the regulation, post and maintain in a visible location a weather proof sign provided by the Department.	☒	☐	☐

1. *Not Applicable; For emergency permits, the public notice requirements in 20.11.41.24 NMAC shall apply instead.*
2. *It is not necessary to include an element if the Department has issued a written waiver regarding the element and the waiver accompanies the application. However, the Department shall not waive any federal requirements.*

The Permit Application shall include:

20.11.41.13(E) NMAC – Application Contents

Item	Included In Application	NA[1]	Waived[2]
(1) A complete permit application on the most recent form provided by the Department.	☒	☐	☐
(2) The application form includes:			
a. The owner's name, street and post office address, and contact information;	☒	☐	☐
b. The facility/ operator's name, street address and mailing address, if different from the owner;	☒	☐	☐
c. The consultant's name, and contact information, if applicable;	☒	☐	☐
d. All information requested on the application form is included (*i.e.*, the form is complete).	☒	☐	☐
(3) Date application is submitted.	☒	☐	☐
(4) Sufficient attachments for the following:			
a. Ambient impact analysis using an atmospheric dispersion model approved by the U.S. Environmental Protection Agency, and the Department to demonstrate compliance with the applicable ambient air quality standards. *See* 20.11.01 NMAC. If you are modifying an existing source, the modeling must include the	☐	☒	☐

Item	Included In Application	NA[1]	Waived[2]
emissions of the entire source to demonstrate the impact the new or modified source(s) will have on existing plant emissions.			
b. The air dispersion model has been executed pursuant to a protocol that was approved in advance by the Department.	☐	☒	☐
c. Air dispersion modeling approved protocol date:	☐	☒	☐
d. Basis or source for each emission rate (including manufacturer's specification sheet, AP-42 section sheets, test data, or corresponding supporting documentation for any other source used).	☒	☐	☐
e. All calculations used to estimate potential emission rates and controlled/proposed emissions.	☒	☐	☐
f. Basis for the estimated control efficiencies and sufficient engineering data for verification of the control equipment operation, including if necessary, design, drawing, test report and factors which affect the normal operation.	☒	☐	☐
g. Fuel data for each existing and/or proposed piece of fuel burning equipment.	☒	☐	☐
h. Anticipated maximum production capacity of the entire facility and the requested production capacity after construction and/or modification.	☒	☐	☐
i. Stack and exhaust gas parameters for all existing and proposed emission stacks.	☒	☐	☐
(5) An operational and maintenance strategy detailing:	☒	☐	☐
a. steps the applicant will take if a malfunction occurs that may cause emission of a regulated air contaminant to exceed a limit that is included in the permit;	☒	☐	☐
b. the nature of emission during routine startup or shutdown of the source and the source's air pollution control equipment; and	☒	☐	☐
c. the steps the application will take to minimize emissions during routine startup or shutdown.	☒	☐	☐
(6) A map, such as a 7.5'-topographic quadrangle map published by the U.S. Geological Survey or a map of equivalent or greater scale, detail, and precision, including a City or County zone atlas map that shows the proposed location of each process equipment unit involved in the proposed construction, modification, or operation of the source, as applicable.	☒	☐	☐
(7) An aerial photograph showing the proposed location of each process equipment unit involved in the proposed construction, modification, relocation or technical revision of the source except for federal agencies or departments involved in national defense or national security as confirmed and agreed by the Department in writing.	☒	☐	☐
(8) A complete description of all sources of regulated air contaminants and a process flow diagram depicting the process equipment unit or units at the facility, both existing and proposed, that are proposed to be involved in routine operations and from which regulated air contaminant emissions are expected to be emitted.	☒	☐	☐
(9) A full description of air pollution control equipment, including all calculations and the basis for all control efficiencies presented, manufacturer's specifications sheets, and site layout and assembly drawings; UTM (universal transverse mercator) coordinates shall be used to identify the location of each emission unit.	☒	☐	☐
(10) A description of the equipment or methods proposed by the applicant to be used for emission measurement.	☒	☐	☐
(11) The maximum and normal operating time schedules of the source after completion of construction or modification, as applicable.	☒	☐	☐
(12) Any other relevant information as the Department may reasonably require, including without limitation:	☒	☐	☐
a. Applicants shall provide documentary proof that the proposed air quality permitted use of the facility's subject property is allowed by the zoning designation of the City or County zoning laws, as applicable. Sufficient documentation includes: (i) a zoning certification from the City Planning Department or County Department of Planning and Development Services, as applicable, if the property is subject to City or County zoning jurisdiction; or (ii) a zoning verification from both planning	☒	☐	☐

Item	Included In Application	NA[1]	Waived[2]
departments if the property is not subject to City or County zoning jurisdiction.[3] A zone atlas map shall not be sufficient.			
(13) The signature of the applicant, operator, owner or an authorized representative, certifying to the accuracy of all information as represented in the application and attachments, if any.	☒	☐	☐
(14) A check or money order for the appropriate application fee or fees required by 20.11.2 NMAC (Fees).	☒	☐	☐

1. *Not Applicable*
2. *It is not necessary to include an element if the Department has issued a written waiver regarding the element and the waiver accompanies the application. However, the Department shall not waive any federal requirements.*
3. *For emergency permit applications, applicants are not required to submit documentation for the subject property's zoning designation.*

SPQ Fume Scrubber Block Diagram

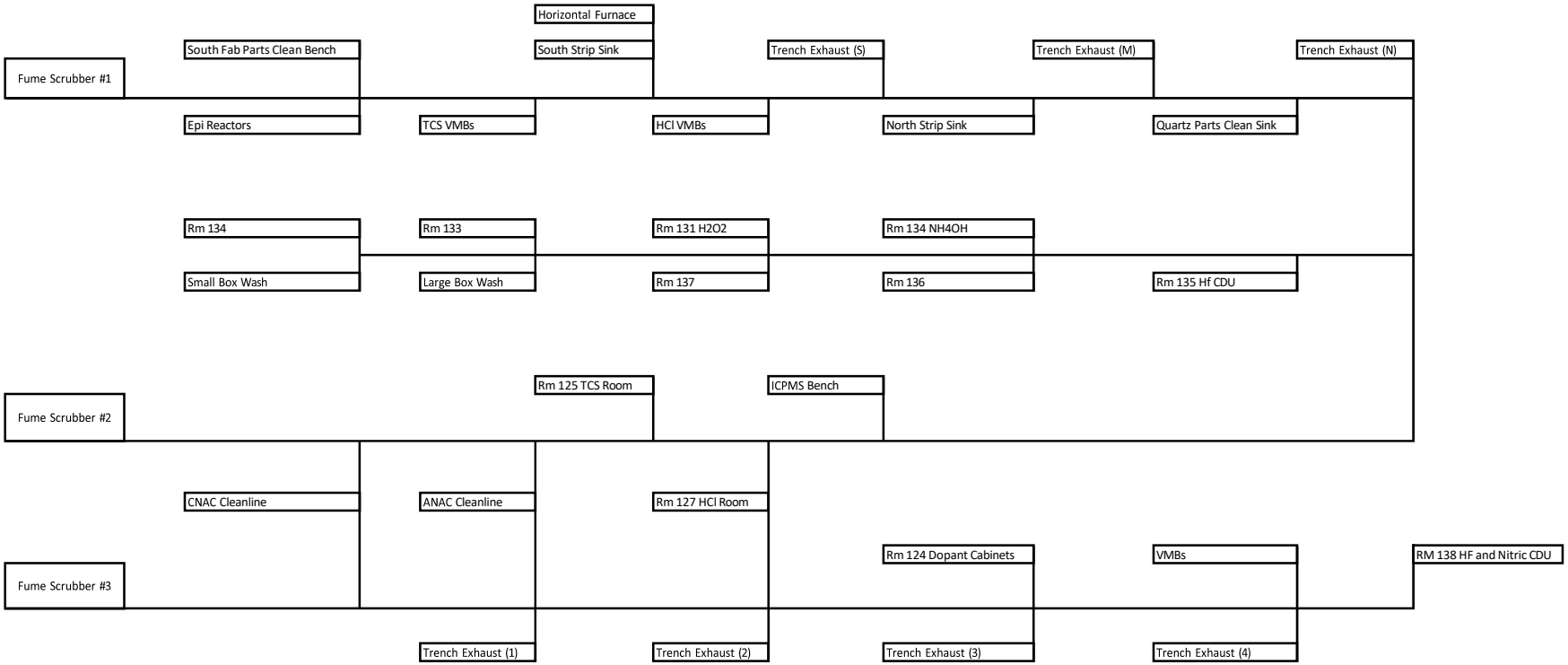

Pre-Permit Application Meeting Request Form

Air Quality Program- Environmental Health Department

Please complete appropriate boxes and email to aqd@cabq.gov or mail to:

Environmental Health Department
Air Quality Program
P.O. Box 1293
Room 3047
Albuquerque, NM 87103

Name:	**Sumco - Albuquerque**
Company/Organization:	**Sumco Phoenix Corporation**
Point of Contact: **(phone number and email):** **Preferred form of contact (circle one):** Phone E-mail ☑	**Adam Erenstein:** (505) 266-6611; aerenstein@trinityconsultants.com **Michael Neely:** (505)-604-0478 Michael.Neely@sumcousa.com **Jeff Homer:** (480)-473-6503; Jeff.Homer@sumcousa.com **Rafael Velazquez:** (480)-473-6563; Rafael.Velazquez@sumcousa.com
Preferred meeting date/times:	9/2/2022
Description of Project:	Sumco is proposing a Permit Modification to the Sumco – Albuquerque facility which is authorized under ATC 0444-M4. The primary scope of the proposed application would be as follows: • To support the processing of wafers, this application requests that the anhydrous hydrogen chloride chemical usage be updated to account for an increase in throughput from 122,385 lb/yr to 225,000 lb/yr.

Veronica Lui

From: Munoz-Dyer, Carina G. <cmunoz-dyer@cabq.gov>
Sent: Friday, September 2, 2022 1:32 PM
To: Neely, Michael; Homer, Jeff; Kauzlaric, Klint
Cc: Adam Erenstein; Pomo, Elizabeth; Albrecht, Christopher P.
Subject: Sumco Permit Modification Follow Up

Good afternoon.

Thank you for the meeting this morning,

As discussed the best path forward is for Sumco to submit a permit modification to increase the purchased amount of HCl.

This email is let you know that modeling is not required for this modification, if the only change is to increase the purchased amount of HCl. Today's meeting will be considered as the pre-application meeting for this modification.

There is only one item pending from our end, which is the latest contact list of Neighborhood Associations and Neighborhood Coalitions located within ½ mile of the site. Bernalillo County and the City of Albuquerque update this list within the first days of every month. We will send the latest list, as soon as we get the contact list for September 2022.

Let us know if you have any questions,

Respectfully,
Carina

CARINA G. MUNOZ-DYER
air quality permitting division manager | environmental health department
o 505.768.1948
m 505.391.9617
cabq.gov/environmentalhealth/

The Four-Way Test of the Things We Think, Say or Do:

1. Is it the **TRUTH**?
2. Is it **FAIR** to all concerned?
3. Will it build **GOODWIL**L and **BETTER FRIENDSHIPS**?
4. Will it be **BENEFICIAL** to all concerned?

City of Albuquerque

Environmental Health Department
Air Quality Program

Permit Application Review Fee Instructions

All source registration, authority-to-construct, and operating permit applications for stationary or portable sources shall be charged an application review fee according to the fee schedule in 20.11.2 NMAC. These filing fees are required for both new construction, reconstruction, and permit modifications applications. Qualified small businesses as defined in 20.11.2 NMAC may be eligible to pay one-half of the application review fees and 100% of all applicable federal program review fees.

Please fill out the permit application review fee checklist and submit with a check or money order payable to the "City of Albuquerque Fund 242" and either:

1. be delivered in person to the Albuquerque Environmental Health Department, 3rd floor, Suite 3023 or Suite 3027, Albuquerque-Bernalillo County Government Center, south building, One Civic Plaza NW, Albuquerque, NM or,

2. mailed to Attn: Air Quality Program, Albuquerque Environmental Health Department, P.O. Box 1293, Albuquerque, NM 87103.

The department will provide a receipt of payment to the applicant. The person delivering or filing a submittal shall attach a copy of the receipt of payment to the submittal as proof of payment Application review fees shall not be refunded without the written approval of the manager. If a refund is requested, a reasonable professional service fee to cover the costs of staff time involved in processing such requests shall be assessed. Please refer to 20.11.2 NMAC (effective January 10, 2011) for more detail concerning the "Fees" regulation as this checklist does not relieve the applicant from any applicable requirement of the regulation.

City of Albuquerque

Environmental Health Department
Air Quality Program

Permit Application Review Fee Checklist Effective January 1, 2022 – December 31, 2022

Please completely fill out the information in each section. Incompleteness of this checklist may result in the Albuquerque Environmental Health Department not accepting the application review fees. If you should have any questions concerning this checklist, please call 768-1972.

I. COMPANY INFORMATION:

Company Name	SUMCO Phoenix Corporation	
Company Address	9401 San Mateo Blvd. NE, Albuquerque, NM 87113	
Facility Name	SUMCO Phoenix Corporation	
Facility Address	9401 San Mateo Blvd. NE, Albuquerque, NM 87113	
Contact Person	Jeff Homer, Rafael Velazquez	
Contact Person Phone Number	480-473-6503, 480-473-6563	
Are these application review fees for an existing permitted source located within the City of Albuquerque or Bernalillo County?	**Yes**	
If yes, what is the permit number associated with this modification?	**Permit #0444-M4**	
Is this application review fee for a Qualified Small Business as defined in 20.11.2 NMAC? (See Definition of Qualified Small Business on Page 4)		**No**

II. STATIONARY SOURCE APPLICATION REVIEW FEES:

If the application is for a new stationary source facility, please check all that apply. If this application is for a modification to an existing permit please see Section III.

Check All That Apply	Stationary Sources	Review Fee	Program Element
	Air Quality Notifications		
	AQN New Application	$599.00	2801
	AQN Technical Amendment	$327.00	2802
	AQN Transfer of a Prior Authorization	$327.00	2803
X	*Not Applicable*	*See Sections Below*	
	Stationary Source Review Fees (Not Based on Proposed Allowable Emission Rate)		
	Source Registration required by 20.11.40 NMAC	$ 610.00	2401
	A Stationary Source that requires a permit pursuant to 20.11.41 NMAC or other board regulations and are not subject to the below proposed allowable emission rates	$ 1,220.00	2301
X	*Not Applicable*	*See Sections Below*	
	Stationary Source Review Fees (Based on the Proposed Allowable Emission Rate for the single highest fee pollutant)		
	Proposed Allowable Emission Rate Equal to or greater than 1 tpy and less than 5 tpy	$915	2302
	Proposed Allowable Emission Rate Equal to or greater than 5 tpy and less than 25 tpy	$1,830	2303
	Proposed Allowable Emission Rate Equal to or greater than 25 tpy and less than 50 tpy	$3,661	2304
	Proposed Allowable Emission Rate Equal to or greater than 50 tpy and less than 75 tpy	$5,491	2305
	Proposed Allowable Emission Rate Equal to or greater than 75 tpy and less than 100 tpy	$7,321	2306
	Proposed Allowable Emission Rate Equal to or greater than 100 tpy	$9,152	2307
X	*Not Applicable*	*See Section Above*	

Federal Program Review Fees (In addition to the Stationary Source Application Review Fees above)			
	40 CFR 60 - "New Source Performance Standards" (NSPS)	$1,220	2308
	40 CFR 61 - "Emission Standards for Hazardous Air Pollutants (NESHAPs)	$1,220	2309
	40 CFR 63 - (NESHAPs) Promulgated Standards	$1,220	2310
	40 CFR 63 - (NESHAPs) Case-by-Case MACT Review	$12,202	2311
	20.11.61 NMAC, Prevention of Significant Deterioration (PSD) Permit	$6,101	2312
	20.11.60 NMAC, Non-Attainment Area Permit	$6,101	2313
X	*Not Applicable*	*Not Applicable*	

III. MODIFICATION TO EXISTING PERMIT APPLICATION REVIEW FEES:

If the permit application is for a modification to an existing permit, please check all that apply. If this application is for a new stationary source facility, please see Section II.

Check All That Apply	Modifications	Review Fee	Program Element
Modification Application Review Fees (Not Based on Proposed Allowable Emission Rate)			
	Proposed modification to an existing stationary source that requires a permit pursuant to 20.11.41 NMAC or other board regulations and are not subject to the below proposed allowable emission rates	$ 1,220	2321
X	*Not Applicable*	*See Sections Below*	
Modification Application Review Fees (Based on the Proposed Allowable Emission Rate for the single highest fee pollutant)			
	Proposed Allowable Emission Rate Equal to or greater than 1 tpy and less than 5 tpy	$915	2322
X	Proposed Allowable Emission Rate Equal to or greater than 5 tpy and less than 25 tpy	$1,830	2323
	Proposed Allowable Emission Rate Equal to or greater than 25 tpy and less than 50 tpy	$3,661	2324
	Proposed Allowable Emission Rate Equal to or greater than 50 tpy and less than 75 tpy	$5,491	2325
	Proposed Allowable Emission Rate Equal to or greater than 75 tpy and less than 100 tpy	$7,321	2326
	Proposed Allowable Emission Rate Equal to or greater than 100 tpy	$9,152	2327
	Not Applicable	*See Section Above*	
Major Modifications Review Fees (In addition to the Modification Application Review Fees above)			
	20.11.60 NMAC, Permitting in Non-Attainment Areas	$6,101	2333
	20.11.61 NMAC, Prevention of Significant Deterioration	$6,101	2334
X	*Not Applicable*	*Not Applicable*	
Federal Program Review Fees (This section applies only if a Federal Program Review is triggered by the proposed modification) (These fees are in addition to the Modification and Major Modification Application Review Fees above)			
	40 CFR 60 - "New Source Performance Standards" (NSPS)	$1,220	2328
	40 CFR 61 - "Emission Standards for Hazardous Air Pollutants (NESHAPs)	$1,220	2329
	40 CFR 63 - (NESHAPs) Promulgated Standards	$1,220	2330
	40 CFR 63 - (NESHAPs) Case-by-Case MACT Review	$12,202	2331
	20.11.61 NMAC, Prevention of Significant Deterioration (PSD) Permit	$6,101	2332
	20.11.60 NMAC, Non-Attainment Area Permit	$6,101	2333
X	*Not Applicable*	*Not Applicable*	

IV. ADMINISTRATIVE AND TECHNICAL REVISION APPLICATION REVIEW FEES:

If the permit application is for an administrative or technical revision of an existing permit issued pursuant to 20.11.41 NMAC, please check one that applies.

Check One	Revision Type	Review Fee	Program Element
	Administrative Revisions	$ 250.00	2340
	Technical Revisions	$ 500.00	2341
X	*Not Applicable*	*See Sections II, III or V*	

V. PORTABLE STATIONARY SOURCE RELOCATION FEES:

If the permit application is for a portable stationary source relocation of an existing permit, please check one that applies.

Check One	Portable Stationary Source Relocation Type	Review Fee	Program Element
	No New Air Dispersion Modeling Required	$ 500.00	2501
	New Air Dispersion Modeling Required	$ 750.00	2502
X	*Not Applicable*	*See Sections II, III or V*	

VI. Please submit a check or money order in the amount shown for the total application review fee.

Section Totals	Review Fee Amount
Section II Total	$
Section III Total	$1,830.00
Section IV Total	$
Section V Total	$
Total Application Review Fee	$1,830.00

I, the undersigned, a responsible official of the applicant company, certify that to the best of my knowledge, the information stated on this checklist, give a true and complete representation of the permit application review fees which are being submitted. I also understand that an incorrect submittal of permit application reviews may cause an incompleteness determination of the submitted permit application and that the balance of the appropriate permit application review fees shall be paid in full prior to further processing of the application.

Signed this 21 **day of** Sept **20**22

Rafael Velazquez — **Print Name**

EHS Manager — **Print Title**

Signature

Definition of Qualified Small Business as defined in 20.11.2 NMAC:
"Qualified small business" means a business that meets all of the following requirements:

(1) a business that has 100 or fewer employees;
(2) a small business concern as defined by the federal Small Business Act;
(3) a source that emits less than 50 tons per year of any individual regulated air pollutant, or less than 75 tons per year of all regulated air pollutants combined; and
(4) a source that is not a major source or major stationary source.

Note: Beginning January 1, 2011, and every January 1 thereafter, an increase based on the consumer price index shall be added to the application review fees. The application review fees established in Subsection A through D of 20.11.2.18 NMAC shall be adjusted by an amount equal to the increase in the consumer price index for the immediately-preceding year. Application review fee adjustments equal to or greater than fifty cents ($0.50) shall be rounded up to the next highest whole dollar. Application review fee adjustments totaling less than fifty cents ($0.50) shall be rounded down to the next lowest whole dollar. The department shall post the application review fees on the city of Albuquerque environmental health department air quality program website.

City of Albuquerque – Environmental Health Department
Air Quality Program
Please mail this application to **P.O. Box 1293, Albuquerque, NM 87103**
or hand deliver between 8:00 am – 5:00 pm Monday – Friday to:
3rd Floor, Suite 3023 – One Civic Plaza NW, Albuquerque, NM 87102
(505) 768-1972 aqd@cabq.gov

Application for Air Pollutant Sources in Bernalillo County
Source Registration (20.11.40 NMAC) and Construction Permits (20.11.41 NMAC)

Submittal Date: 09/21/2022

Owner/Corporate Information ☐ **Check here and leave this section blank if information is exactly the same as Facility Information below.**

Company Name: **Sumco Phoenix Corporation**			
Mailing Address: **19801 North Tatum Blvd**	City: **Phoenix**	State: **AZ**	Zip: **85233**
Company Phone: **480-473-6503** **480-473-6563**	Company Contact: **Jeff Homer** **Rafael Velazquez**		
Company Contact Title: **Corporate Director, EHS** **EHS Manager**	Phone: **480-473-6503** **480-473-6563**	E-mail: **Jeff.homer@sumcousa.com,** **Rafael.velazquez@sumcousa.com**	

Stationary Source (Facility) Information: **Provide a plot plan (legal description/drawing of the facility property) with overlay sketch of facility processes, location of emission points, pollutant type, and distances to property boundaries.**

Facility Name: **Sumco Phoenix Corporation, Albuquerque Facility**			
Facility Physical Address: **9401 San Mateo Blvd NE**	City: **Albuqurque**	State: **NM**	Zip: **87113**
Facility Mailing Address (if different): **N/A**	City: **N/A**	State: **N/A**	Zip: **N/A**
Facility Contact: **Jeff Homer** **Rafael Velazquez**	Title: **Corporate Director, EHS** **EHS Manager**		
Phone: **480-473-6503** **480-473-6563**	E-mail: **Jeff.homer@sumcousa.com,** **Rafael.velazquez@sumcousa.com**		
Authorized Representative Name[1]: **Jeff Homer** **Rafael Velazquez**	Authorized Representative Title: **Corporate Director, EHS** **EHS Manager**		

Billing Information ☐ **Check here if same contact and mailing address as corporate** ☒ **Check here if same as facility**

Billing Company Name: **N/A**			
Mailing Address: **N/A**	City: **N/A**	State: **N/A**	Zip: **N/A**
Billing Contact: **N/A**	Title: **N/A**		
Phone: **N/A**	E-mail: **N/A**		

Preparer/Consultant(s) Information ☐ **Check here and leave section blank if no Consultant used or Preparer is same as Facility Contact.**

Name: **Adam Erenstein**	Title: **Manager of Consulting Services**		
Mailing Address: **9400 Holly Ave, Buidling 3, Suite B**	City: **Albuquerque**	State: **NM**	Zip: **87122**
Phone: **(505) 266-6611**	Email: **aerenstein@trinityconsultants.com**		

1. See 20.11.41.13(E)(13) NMAC.

Application for Air Pollutant Sources in Bernalillo County
Source Registration (20.11.40 NMAC) and Construction Permits (20.11.41 NMAC)

General Operation Information (if any question does not pertain to your facility, type N/A on the line or in the box)

Permitting action being requested (please refer to the definitions in 20.11.40 NMAC or 20.11.41 NMAC):			
☐ New Permit	☒ Permit Modification Current Permit #: **0444-M4**	☐ Technical Permit Revision Current Permit #:	☐ Administrative Permit Revision Current Permit #:
☐ New Registration Certificate	☐ Modification Current Reg. #:	☐ Technical Revision Current Reg. #:	☐ Administrative Revision Current Reg. #:

UTM coordinates of facility (Zone 13, NAD 83): **35 11' 38.5", 106 35'15"**	
Facility type (*i.e.*, a description of your facility operations): **Silicon Wafer Manufacturing**	
Standard Industrial Classification (SIC Code #): **3674**	North American Industry Classification System (NAICS Code #): **334413**
Is this facility currently operating in Bernalillo County? **Yes**	If **YES**, list date of original construction: **3/30/95** If **NO**, list date of planned startup:
Is the facility permanent? **Yes**	If **NO**, list dates for requested temporary operation: From Through
Is the facility a portable stationary source? **No**	If **YES**, is the facility address listed above the main permitted location for this source?
Is the application for a physical or operational change, expansion, or reconstruction (*e.g.*, altering process, or adding, or replacing process or control equipment, etc.) to an existing facility? **Yes**	
Provide a description of the requested changes: **To support the processing of wafers, this application requests that the anhydrous hydrogen chloride chemical usage be updated to account for an increase in throughput from 122,385 lb/yr to 225,000 lb/yr.**	
What is the facility's operation? ☒ Continuous ☐ Intermittent ☐ Batch	

Estimated percent of production/operation:	Jan-Mar: **25**	Apr-Jun: **25**	Jul-Sep: **25**	Oct-Dec: **25**
Requested operating times of facility:	**24** hours/day	**7** days/week	**4.34** weeks/month	**12** months/year

Will there be special or seasonal operating times other than shown above? This includes monthly- or seasonally-varying hours. **No**
If **YES**, please explain: **N/A**
List raw materials processed: **Silicon Wafers**
List saleable item(s) produced: **Epitaxial Wafers**

USE INSTRUCTIONS: For the forms on the following pages, please do not alter or delete the existing footnotes or page breaks. If additional footnotes are needed then add them to the end of the existing footnote list for a given table. Only update the rows and cells within tables as necessary for your project. Unused rows can be deleted from tables. If multiple scenarios will be represented then the Uncontrolled and Controlled Emission Tables, and other tables as needed, can be duplicated and adjusted to indicate the different scenarios.

Regulated Emission Sources Table

(*E.g.*, Generator-Crusher-Screen-Conveyor-Boiler-Mixer-Spray Guns-Saws-Sander-Oven-Dryer-Furnace-Incinerator-Haul Road-Storage Pile, etc.) Match the Units listed on this Table to the same numbered line if also listed on Emissions Tables & Stack Table.

Unit Number and Description[1]		Manufacturer	Model #	Serial #	Manufacture Date	Installation Date	Modification Date[2]	Process Rate or Capacity (Hp, kW, Btu, ft^3, lbs, tons, yd^3, etc.)[3]	Fuel Type
1	Cleaning Area Quartz Cleaning Process Clean NAC-1 Process Clean NAC-2 Process Clean SMS-2 Process Clean SMS-1 Process Clean SMS-3	N/A	N/A	N/A	N/A	~1990-2000	N/A	N/A	N/A
2	Process Clean Dopant VMB	N/A	N/A	N/A	N/A	~1990-2000	N/A	N/A	N/A
3	Chemical Vapor Deposition Unit (CVDU)	N/A	N/A	N/A	N/A	~1990-2000	N/A	N/A	N/A
4	Chemical Vapor Deposition Unit (CVDU)	N/A	N/A	N/A	N/A	~1990-2000	N/A	N/A	N/A
5	Natural Gas Boiler	Unilux	ZF 800W	N/A	2018/2019	2019	N/A	8.27 MMBtu/hr	Natural Gas
6	Chemical Vapor Deposition Unit (CVDU)	N/A	N/A	N/A	N/A	~1990-2000	N/A	N/A	N/A
8	Diesel Generator	Cummins	NTA8550G3	N/A	1994	1994/1995	N/A	535 hp/399 KW	Diesel
9	Natural Gas Boiler	Unilux	ZF-800W-G	52825	2013/2014	2014	N/A	8.27 MM Btu/hr	Natural Gas
10	Natural Gas Fired Steam Humidifier	PURE Humidifier Company	GXDDR-8	N/A	2020	3/2022	N/A	0.8 MMBtu/hr	Natural Gas
11	Natural Gas Fired Steam Humidifier	PURE Humidifier Company	GXDDR-8	12694-H2	N/A	~2007	N/A	0.8 MMBtu/hr	Natural Gas
12	Chemical Vapor Deposition Unit (CVDU)	ASM	E2000	092531 092370 092330 092320	1997	2010	N/A	N/A	N/A
13	Chemical Vapor Deposition Unit (CVDU)	ASM	E2000	092910 092630 091962 095370 095420 092400	1997	2010	N/A	N/A	N/A
14	Cooling Tower	BAC	S3E-1222-07O	U174827501	2017	2017	N/A	1656 gal/min	N/A
15	Cooling Tower	BAC	VP1-216-220W	U202475401	2020	2020	N/A	500 gal/min	N/A
16	Cooling Tower	BAC	3552C-MM	U14743170201	2014	2014	N/A	1656 gal/min	N/A
17	Cooling Tower	BAC	F1-1662-DMCX	96200724	1997	1997	N/A	500 gal/min	N/A
18	Cooling Tower	BAC	S3E-1222-07P	U188609101	2018	2018	N/A	2100 gal/min	N/A

NOTE: To add extra rows in Word, click anywhere in the last row. A plus (+) sign should appear on the bottom right corner of the row. Click the plus (+) sign to add a row. Repeat as needed.

1. Unit numbers must correspond to unit numbers in the previous permit unless a complete cross reference table of all units in both permits is provided.
2. To determine whether a unit has been modified, evaluate if changes have been made to the unit that impact emissions or that trigger modification as defined in 20.11.41.7(U) NMAC. If not, put N/A.
3. Basis for Equipment Process Rate or Capacity (*e.g.*, Manufacturer's Data, Field Observation/Test, etc.) _____
   Submit information for each unit as an attachment.

Basis for Equipment Process Rate or Capacity

Cleaning Area, Quartz Cleaning, Process Clean SMS (Unit 1)

This unit consists of emissions cleaning acids contained in baths or wipes used on various quartz parts and or wafers. Any evaporative losses of chemicals (Hydrofluoric or Nitric acid) would be routed to exhaust scrubbers FS1 and FS2, which has a 99% destruction efficiency based on AP-42 Table 8.7-2 (see caustic scrubber). Evaporative losses are conservatively estimated using non-recovered chemical usages reported in the "Purchased Hazardous Air Pollutant Table."

Process Clean Dopant VMB (Unit 2)

This unit consists of the compressed gas dopant containments and manifolds. If dopant gases (Diborane, Arsine and Phosphine) are lost in the room they are routed to exhaust scrubber FS3, which has a 99% destruction efficiency based on AP-42 Table 8.7-2 (see caustic scrubber). Evaporative losses are conservatively estimated using non-recovered chemical usages reported in the "Purchased Hazardous Air Pollutant Table."

Chemical Vapor Deposition Units (Units 3, 4, 6, 12, and 13)

These units consist of the reactors and Airguard scrubbers. Most if not all of the products taken into the reactors (Anhydrous Hydrogen Chloride, H2, Dopant gases) are consumed in the reactor process. Any residual fume and or gas is handled by the Airguard units, which have a 99% destruction efficiency based on the manufacturer specifications.

Natural Gas Boilers (Units 5 and 9)

Manufacturer data is included in this application, which reports the operating capacity of these units.

Diesel Generator (Unit 8)

Emissions and stack parameters for this unit are not changing from the existing permit. Emissions were estimated using emission factors from AP-42 Table 3.2-2. A 20% safety factor was assumed for NOX, VOC, SO2 and PM emissions. A 70% safety factor was assumed for CO emissions.

Natural Gas-Fired Steam Humidifiers (Units 10 and 11)

Manufacturer data is included in this application, which reports the operating capacity of these units.

Cooling Towers (Units 14 to 18)

Cooling tower emissions were calculated using guidance provided in the NMED technical memorandum for "Calculating TSP, PM10, and PM 2.5 from Cooling Towers" dated 9/9/2013. The Albuquerque Bernalillo County Water Utility Authority requires that the water in the cooling towers do not have TDS concentrations excess of 350 ppm. SUMCO conservatively estimates the circulation rates for the cooling towers. These values are used to conservatively estimate emissions from the cooling towers.

Emissions Control Equipment Table

Control Equipment Units listed on this Table should either match up to the same Unit number as listed on the Regulated Emission Sources, Controlled Emissions and Stack Parameters Tables (if the control equipment is integrated with the emission unit) or should have a distinct Control Equipment Unit Number and that number should then also be listed on the Stack Parameters Table.

Control Equipment Unit Number and Description		Controlling Emissions for Unit Number(s)	Manufacturer	Model # | Serial #	Date Installed	Controlled Pollutant(s)	% Control Efficiency[1]	Method Used to Estimate Efficiency	Rated Process Rate or Capacity or Flow
FS1	Acid Exhaust Scrubber	1	Beverly Pacific	N/A	Unknown	HF, Anhydrous Hydrogen Chloride, HNO3, NH4OH	99%	AP-42 Table 8.7-2	20,000 ACFM
FS2	Acid Exhaust Scrubber	1	Beverly Pacific	N/A	Unknown	HF, Anhydrous Hydrogen Chloride, HNO3, NH4OH	99%	AP-42 Table 8.7-2	20,000 ACFM
FS3	Acid Exhaust Scrubber	2	Beverly Pacific	N/A	Unknown	B2H6	99%	AP-42 Table 8.7-2	11,000 ACFM
CVDU	CVDU Scrubbers	3, 4, 6, 12, and 13	Air Guard	1997	Unknown	HCl	99%	Manufacturer data	2.0 ACFM

NOTE: To add extra rows in Word, click anywhere in the last row. A plus (+) sign should appear on the bottom right corner of the row. Click the plus (+) sign to add a row. Repeat as needed.

1. Basis for Control Equipment % Efficiency (*e.g.*, Manufacturer's Data, Field Observation/Test, AP-42, etc.). _____
   Submit information for each unit as an attachment.

Basis for Control Equipment % Efficiency

Acid Exhaust Scrubbers (Units FS1 to FS3)
AP-42 Table 8.7-2 (See Caustic Scrubber Control Efficiency)

CVDU Scrubber (Unit CVDU)
Manufacurer data

Exempted Sources and Exempted Activities Table

See 20.11.41 NMAC for exemptions.

Unit Number and Description	Manufacturer	Model #	Serial #	Manufacture Date	Installation Date	Modification Date[1]	Process Rate or Capacity (Hp, kW, Btu, ft^3, lbs, tons, yd^3, etc.)[2]	Fuel Type
There are no exempted sources or activities at this facility								

NOTE: To add extra rows in Word, click anywhere in the last row. A plus (+) sign should appear on the bottom right corner of the row. Click the plus (+) sign to add a row. Repeat as needed.

1. To determine whether a unit has been modified, evaluate if changes have been made to the unit that impact emissions or that trigger modification as defined in 20.11.41.7(U) NMAC. Also, consider if any changes that were made alter the status from exempt to non-exempt. If not, put N/A.
2. Basis for Equipment Process Rate or Capacity (*e.g.*, Manufacturer's Data, Field Observation/Test, etc.) _____
   Submit information for each unit as an attachment.

Uncontrolled Emissions Table

(Process potential under physical/operational limitations during a 24 hr/day and 365 day/year = 8760 hrs)

Regulated Emission Units listed on this Table should match up to the same numbered line and Unit as listed on the Regulated Emissions and Controlled Tables. List total HAP values per Emission Unit if overall HAP total for the facility is ≥ 1 ton/yr.

Unit Number*	Nitrogen Oxides (NO_X)		Carbon Monoxide (CO)		Nonmethane Hydrocarbons/Volatile Organic Compounds (NMHC/VOCs)		Sulfur Dioxide (SO_2)		Particulate Matter ≤ 10 Microns (PM_{10})		Particulate Matter ≤ 2.5 Microns ($PM_{2.5}$)		Hazardous Air Pollutants (HAPs)		Method(s) used for Determination of Emissions (AP-42, Material Balance, Field Tests, etc.)
	lb/hr	ton/yr	lb/hr	ton/yr	lb/hr	ton/yr	lb/hr	ton/yr	lb/hr	ton/yr	lb/hr	ton/yr	lb/hr	ton/yr	
5[2]	0.81	3.55	0.68	2.98	0.045	0.20	0.0046	0.020	0.062	0.27	0.062	0.27	-	-	AP-42 Tables 1.4-1 and 2
9[2]	0.81	3.55	0.68	2.98	0.045	0.20	0.0046	0.020	0.062	0.27	0.062	0.27	-	-	AP-42 Tables 1.4-1 and 2
8	19.90	5.00	6.10	1.50	1.60	0.40	1.30	0.30	1.40	0.40	1.40	0.40	-	-	AP-42 Table 3.3-2 with Safety Factors
10[2]	0.078	0.34	0.066	0.29	0.0043	0.019	4.48E-04	0.0020	0.0060	0.026	0.0060	0.026	-	-	AP-42 Tables 1.4-1 and 2
11[2]	0.078	0.34	0.066	0.29	0.0043	0.019	4.48E-04	0.0020	0.0060	0.026	0.0060	0.026	-	-	AP-42 Tables 1.4-1 and 2
14	-	-	-	-	-	-	-	-	0.051	0.22	2.98E-04	0.0013	-	-	NMED Technical Memorandum
15	-	-	-	-	-	-	-	-	0.015	0.068	9.01E-05	3.95E-04	-	-	NMED Technical Memorandum
16	-	-	-	-	-	-	-	-	0.051	0.22	2.98E-04	0.0013	-	-	NMED Technical Memorandum
17	-	-	-	-	-	-	-	-	0.015	0.068	9.01E-05	3.95E-04	-	-	NMED Technical Memorandum
18	-	-	-	-	-	-	-	-	0.065	0.28	3.78E-04	0.0017	-	-	NMED Technical Memorandum
Totals of Uncontrolled Emissions	**21.68**	**12.79**	**7.59**	**8.04**	**1.70**	**0.83**	**1.31**	**0.34**	**1.73**	**1.86**	**1.54**	**1.00**	**-**	**-**	

[1]Units 1, 2, 3, 4, 6, 12, and 13 only emit HAPs, but Total HAP emissions at this facility are less than 1 tpy and are therefore not reported in this table.
[2]Only one humidifier and one boiler can be physically operated simultaneously.

*A permit is required and this application along with the additional checklist information requested on the Permit Application checklist must be provided if:
(1) any one of these process units <u>or</u> combination of units, has an uncontrolled emission rate greater than or equal to (≥) 10 lbs/hr or 25 tons/yr for any of the above pollutants, excluding HAPs, based on 8,760 hours of operation; or
(2) any one of these process units <u>or</u> combination of units, has an uncontrolled emission rate ≥ 2 tons/yr for any single HAP or ≥ 5 tons/yr for any combination of HAPs based on 8,760 hours of operation; or
(3) any one of these process units <u>or</u> combination of units, has an uncontrolled emission rate ≥ 5 tons/yr for lead (Pb) or any combination of lead and its compounds based on 8,760 hours of operation; or

(4) any one of the process units or combination of units is subject to an Air Board or federal emission limit or standard.

* If all of these process units, individually and in combination, have an uncontrolled emission rate less than (<) 10 lbs/hr or 25 tons/yr for all of the above pollutants (based on 8,760 hours of operation), but > 1 ton/yr for any of the above pollutants, then a source registration is required. A Registration is required, at minimum, for any amount of HAP emissions. Please complete the remainder of this form.

Controlled Emissions Table

(Based on current operations with emission controls OR requested operations with emission controls)

Regulated Emission Units listed on this Table should match up to the same numbered line and Unit as listed on the Regulated Emissions and Uncontrolled Tables. List total HAP values per Emission Unit if overall HAP total for the facility is ≥ 1 ton/yr.

Unit Number	Nitrogen Oxides (NO_X)		Carbon Monoxide (CO)		Nonmethane Hydrocarbons/Volatile Organic Compounds (NMHC/VOCs)		Sulfur Dioxide (SO_2)		Particulate Matter ≤ 10 Microns (PM_{10})		Particulate Matter ≤ 2.5 Microns ($PM_{2.5}$)		Hazardous Air Pollutants (HAPs)		Control Method	% Efficiency[1]
	lb/hr	ton/yr	lb/hr	ton/yr	lb/hr	ton/yr	lb/hr	ton/yr	lb/hr	ton/yr	lb/hr	ton/yr	lb/hr	ton/yr		
5 & 9[2]	0.81	3.55	0.68	2.98	0.045	0.20	0.0046	0.020	0.062	0.27	0.062	0.27	-	-	N/A	N/A
8	19.90	5.00	6.10	1.50	1.60	0.40	1.30	0.30	1.40	0.40	1.40	0.40	-	-	N/A	N/A
10 & 11[2]	0.078	0.34	0.066	0.29	0.0043	0.019	4.48E-04	0.0020	0.0060	0.026	0.0060	0.026	-	-	N/A	N/A
14	-	-	-	-	-	-	-	-	0.051	0.22	2.98E-04	0.0013	-	-	N/A	N/A
15	-	-	-	-	-	-	-	-	0.015	0.068	9.01E-05	3.95E-04	-	-	N/A	N/A
16	-	-	-	-	-	-	-	-	0.051	0.22	2.98E-04	0.0013	-	-	N/A	N/A
17	-	-	-	-	-	-	-	-	0.015	0.068	9.01E-05	3.95E-04	-	-	N/A	N/A
18	-	-	-	-	-	-	-	-	0.065	0.28	3.78E-04	0.0017	-	-	N/A	N/A
Totals of Controlled Emissions	**20.79**	**8.89**	**6.85**	**4.77**	**1.65**	**0.61**	**1.31**	**0.32**	**1.67**	**1.56**	**1.47**	**0.70**	**-**	**-**		

[1]Units 1, 2, 3, 4, 6, 12, and 13 only emit HAPs, but Total HAP emissions at this facility are less than 1 tpy and are therefore not reported in this table.

[2]Only one humidifier and one boiler can be physically operated simultaneously. Accordingly, the emissions reported for Units 5 & 9 represent the emissions for a single boiler and the emissions reported for Units 10 & 11 represent the emissions for a single humidifier.

1. Basis for Control Method % Efficiency (*e.g.*, Manufacturer's Data, Field Observation/Test, AP-42, etc.). **There are no emission controls associated with the equipment reported in this table.** Submit information for each unit as an attachment.

Hazardous Air Pollutants (HAPs) Emissions Table

Report the Potential Emission Rate for each HAP from each source on the Regulated Emission Sources Table that emits a given HAP. Report individual HAPs with ≥ 1 ton/yr total emissions for the facility on this table. Otherwise, report total HAP emissions for each source that emits HAPs and report individual HAPs in the accompanying application package in association with emission calculations. If this application is for a Registration solely due to HAP emissions, report the largest HAP emissions on this table and the rest, if any, in the accompanying application package.

Unit Number	Hydroflouric Acid		Anhydrous Hydrogen Chloride		Diborane		Nitric Acid									
	lb/hr	ton/yr	lb/hr	ton/yr	lb/hr	ton/yr	lb/hr	ton/yr	lb/hr	ton/yr	lb/hr	ton/yr	lb/hr	ton/yr	lb/hr	ton/yr
1	0.012	0.053	-	-	-	-	0.010	0.042								
2	-	-	-	-	6.65E-06	2.91E-05	-	-								
3, 4, 6, 12, 13	-	-	0.26	1.13	6.65E-06	2.91E-05	-	-								
Totals of HAPs for all units:	0.012	0.053	0.26	1.13	1.33E-05	5.83E-05	0.0096	0.042								

NOTE: To add extra rows in Word, click anywhere in the second-to-last row. A plus (+) sign should appear on the bottom right corner of the row. Click the plus (+) sign to add a row. Repeat as needed.

Use Instructions: Copy and paste the HAPs table here if need to list more individual HAPs.

Purchased Hazardous Air Pollutant Table*

Product Categories (Coatings, Solvents, Thinners, etc.)	Hazardous Air Pollutant (HAP), or Volatile Hazardous Air Pollutant (VHAP) Primary To The Representative As Purchased Product	Chemical Abstract Service (CAS) Number of HAP or VHAP from Representative As Purchased Product	HAP or VHAP Concentration of Representative As Purchased Product (pounds/gallon, or %)	Concentration Determination (CPDS, SDS, etc.)[1]	Total Product Purchases For Category	(-)	Quantity of Product Recovered & Disposed For Category	(=)	Total Product Usage For Category
1. Cleaning Acid	Hydrofloric Acid	7664-39-3	49%	SDS	- lb/yr 2,350 gal/yr	(-)	- lb/yr 96 gal/yr	(=)	- lb/yr 2,254 gal/yr
2. Process Acid	Anhydrous Hydrogen Chloride	7647-01-0	100%	SDS	225,000 lb/yr - gal/yr	(-)	22,500 lb/yr - gal/yr	(=)	202,500 lb/yr - gal/yr
3. Dopant	Diborane in Hydrogen	19287-45-7	5000 ppm	SDS	36,000 cf/yr - gal/yr	(-)	5,400 cf/yr - gal/yr	(=)	30,600 cf/yr - gal/yr
4. Dopant	Phosphine in Hydrogen	7803-51-2	200 ppm	SDS	24,000 cf/yr - gal/yr	(-)	3,600 cf/yr - gal/yr	(=)	20,400 cf/yr - gal/yr
5. Dopant	Arsine in Hydrogen	7784-42-1	5000 ppm	SDS	19,200 cf/yr - gal/yr	(-)	2,880 cf/yr - gal/yr	(=)	16,320 cf/yr - gal/yr
6. Cleaning Acid	Nitric Acid	7697-37-2	70%	SDS	- lb/yr 200 gal/yr	(-)	- lb/yr 8 gal/yr	(=)	- lb/yr 192 gal/yr
TOTALS					**225,000** lb/yr **2,550** gal/yr **79,200** cf/yr	(-)	**22,500** lb/yr **104** gal/yr **11,880** cf/yr	(=)	**202,500** lb/yr **2,446** gal/yr **67,320** cf/yr

NOTE: To add extra rows in Word, click anywhere in the second-to-last row. A plus (+) sign should appear on the bottom right corner of the row. Click the plus (+) sign to add a row. Repeat as needed.

NOTE: Product purchases, recovery/disposal and usage should be converted to the units listed in this table. If units cannot be converted please contact the Air Quality Program prior to making changes to this table.

1. Submit, as an attachment, information on one (1) product from each Category listed above which best represents the average of all the products purchased in that Category. CPDS = Certified Product Data Sheet; SDS = Safety Data Sheet

*** A Registration is required, at minimum, for any amount of HAP or VHAP emission.**
Emissions from purchased HAP usage should be accounted for on previous tables as appropriate.
A permit may be required for these emissions if the source meets the requirements of 20.11.41 NMAC.

Material and Fuel Storage Table

(*E.g.*, Tanks, barrels, silos, stockpiles, etc.)

Storage Equipment		Product Stored	Capacity (bbls, tons, gals, acres, etc.)	Above or Below Ground	Construction (Welded, riveted) & Color	Installation Date	Loading Rate[1]	Offloading Rate[1]	True Vapor Pressure	Control Method	Seal Type	% Eff.[2]
1	Hydrogen Storage Tank	**H_2**	10,000 gal	Above Ground	Horizonal, White	N/A	N/A	N/A	N/A	N/A	N/A	N/A

NOTE: To add extra rows in Word, click anywhere in the last row. A plus (+) sign should appear on the bottom right corner of the row. Click the plus (+) sign to add a row. Repeat as needed.

1. Basis for Loading/Offloading Rate (*e.g.*, Manufacturer's Data, Field Observation/Test, etc.). **N/A – there are no emissions of regulated pollutants associated with the hydrogen storage tank.**
   Submit information for each unit as an attachment.

2. Basis for Control Method % Efficiency (*e.g.*, Manufacturer's Data, Field Observation/Test, AP-42, etc.). **N/A – there are no emissions of regulated pollutants associated with the hydrogen storage tank.**
   Submit information for each unit as an attachment.

Stack Parameters Table

If any equipment from the Regulated Emission Sources Table is also listed in this Stack Table, use the same numbered line for the emission unit on both tables to show the association between the Process Equipment and its stack.

Unit Number and Description		Pollutant (CO, NOx, PM_{10}, etc.)	UTM Easting (m)	UTM Northing (m)	Stack Height (ft)	Stack Exit Temp. (°F)	Stack Velocity (fps)	Stack Flow Rate (acfm)	Stack Inside Diameter (ft)	Stack Type
FS1	Controls Unit 1	HF, Anhydrous Hydrogen Chloride, HNO_3, NH_4OH	355457.91	3895689.71	56	70	21.29	9030	3	Vertical
FS2	Controls Unit 1	HF, Anhydrous Hydrogen Chloride, HNO_3, NH_4OH	3895689.71	3895736.88	56	70	0.02	1.45	2	Vertical
FS3	Controls Unit 2	B_2H_6	355458.94	3895734.64	56	77	0.02	1.45	2	Vertical
CVDUs	Controls Units 3, 4, 6, 12, 13	Anhydrous Hydrogen Chloride	355458.72 355458.77 355457.97	3895723.83 3895722.36 3895691.72	56	77	0.02	1.45	2	Vertical
5	Natural Gas Boiler	NO_X, CO, VOC, SO_2, PM_{10}, $PM_{2.5}$	355457.00	3895696.00	55.35	600	32.93	6207	2	Vertical
8	Deisel Generator	NO_X, CO, VOC, SO_2, PM_{10}, $PM_{2.5}$	355450.00	3895759.00	10	980	98.29	3190	0.83	Vertical
9	Natural Gas Boiler	NO_X, CO, VOC, SO_2, PM_{10}, $PM_{2.5}$	355457.00	3895696.00	55.35	600	32.93	6207	2	Vertical
10	Natural Gas Humidifier	NO_X, CO, VOC, SO_2, PM_{10}, $PM_{2.5}$	355493.00	3895719.00	29.66	300	83.89	431	0.33	Vertical
11	Natural Gas Humidifier	NO_X, CO, VOC, SO_2, PM_{10}, $PM_{2.5}$	355493.00	3895717.00	29.66	300	83.98	431	0.33	Vertical
14	Cooling Tower	PM_{10}, $PM_{2.5}$	355450.00	3895689.48	15	Ambient	21.99	N/A	10	Vertical
15	Cooling Tower	PM_{10}, $PM_{2.5}$	355448.15	3895700.77	18	Ambient	21.99	N/A	10	Vertical
16	Cooling Tower	PM_{10}, $PM_{2.5}$	355450.50	3895693.33	15	Ambient	21.99	N/A	10	Vertical
17	Cooling Tower	PM_{10}, $PM_{2.5}$	355448.07	3895707.24	18	Ambient	21.99	N/A	10	Vertical
18	Cooling Tower	PM_{10}, $PM_{2.5}$	355450.00	3895715.00	30	Ambient	21.99	N/A	10	Vertical

NOTE: To add extra rows in Word, click anywhere in the last row. A plus (+) sign should appear on the bottom right corner of the row. Click the plus (+) sign to add a row. Repeat as needed.

Certification

NOTICE REGARDING SCOPE OF A PERMIT: The Environmental Health Department's issuance of an air quality permit only authorizes the use of the specified equipment pursuant to the air quality control laws, regulations and conditions. Permits relate to air quality control only and are issued for the sole purpose of regulating the emission of air contaminants from said equipment. Air quality permits are not a general authorization for the location, construction and/or operation of a facility, nor does a permit authorize any particular land use or other form of land entitlement. It is the applicant's/permittee's responsibility to obtain all other necessary permits from the appropriate agencies, such as the City of Albuquerque Planning Department or Bernalillo County Department of Planning and Development Services, including but not limited to site plan approvals, building permits, fire department approvals and the like, as may be required by law for the location, construction and/or operation of a facility. For more information, please visit the City of Albuquerque Planning Department website at https://www.cabq.gov/planning and the Bernalillo County Department of Planning and Development Services website at https://www.bernco.gov/planning.

NOTICE REGARDING ACCURACY OF INFORMATION AND DATA SUBMITTED: Any misrepresentation of a material fact in this application and its attachments is cause for denial of a permit or revocation of part or all of the resulting registration or permit, and revocation of a permit for cause may limit the permitee's ability to obtain any subsequent air quality permit for ten (10) years. Any person who knowingly makes any false statement, representation, or certification in any application, record, report, plan or other document filed or required to be maintained under the Air Quality Control Act, NMSA 1978 §§ 74-2-1 to 74-2-17, is guilty of a misdemeanor and shall, upon conviction, be punished by a fine of not more than ten thousand dollars ($10,000) per day per violation or by imprisonment for not more than twelve months, or by both.

I, the undersigned, hereby certify that I have knowledge of the information and data represented and submitted in this application and that the same is true and accurate, including the information and date in any and all attachments, including without limitation associated forms, materials, drawings, specifications, and other data. I also certify that the information represented gives a true and complete portrayal of the existing, modified existing, or planned new stationary source with respect to air pollution sources and control equipment. I understand that there may be significant penalties for submitting false information, including the possibility of fines and imprisonment for knowing violations. I also understand that the person who has applied for or has been issued an air quality permit by the Department is an obligatory party to a permit appeal filed pursuant to 20.11.81 NMAC. Further, I certify that I am qualified and authorized to file this application, to certify the truth and accuracy of the information herein, and bind the source. Moreover, I covenant and agree to comply with any requests by the Department for additional information necessary for the Department to evaluate or make a final decision regarding the application.

Signed this 21 day of Sept, 20 22

Rafael Velazquez
Print Name

EHS Manager
Print Title

Signature

Role: ☐ Owner ☐ Operator

☒ Other Authorized Representative

Public Notice Documentation

Trinity Consultants

Timothy M. Keller,
Mayor

Public Participation

List of Neighborhood Associations
and Neighborhood Coalitions
MEMORANDUM

To: Adam Erenstein, Principal Consultant
From: Elizabeth Pomo, Senior Environmental Health Scientist
Subject: Determination of Neighborhood Associations and Coalitions within 0.5 mile of 9401 San Mateo Blvd. NE in Bernalillo County, NM
Date: September 12, 2022

DETERMINATION:

On September 12, 2022 I used the City of Albuquerque Zoning Advanced Map Viewer (http://coagisweb.cabq.gov/) to verify which City of Albuquerque Neighborhood Associations (NA), Homeowner Associations (HOA) and Neighborhood Coalitions (NC) are located within 0.5 mile of 9401 San Mateo Blvd. NE in Bernalillo County, NM.

I then used the City of Albuquerque Office (COA) of Neighborhood Coordination's Monthly Master NA List dated September 2022 and the Bernalillo County (BC) Monthly Neighborhood Association September 2022 Excel file to determine the contact information for each NA and NC located within 0.5 mile of 9401 San Mateo Blvd. NE in Bernalillo County, NM.

The table below contains the contact information, which will be used in the City of Albuquerque Environmental Health Department's public notice. Duplicates have been deleted.

COA/BC Association or Coalition	Name	Email or Mailing Address*
District 4 Coalition of Neighborhood Associations	Mildred Griffee Mark Reynolds Association Email	mgriffee@noreste.org reynolds@unm.edu sect.dist4@gmail.com
Nor Este Neighborhood Association	Uri Bassan Gina Pioquinto	uri.bassan@noreste.org rpmartinez003@gmail.com
North Edith Commercial Corridor Association	Michael Haederle Evelyn Harris	haederle@yahoo.com grumpyeh46@comcast.net
North Valley Coalition	Peggy Norton Doyle Kimbrough Coalition Email	peggynorton@yahoo.com newmexmba@aol.com nvcabq@gmail.com
Wildflower Area Neighborhood Association	Charles Bates Larry Caudill Erin O'Neil Joe Gober	cefisher.67@gmail.com ltcaudill@comcast.net ejoneil40@gmail.com gober621@comcast.net

If email address is not listed, provide public notice via certified mail and include a copy of each mail receipt with the application submittal.

NOTICE FROM THE APPLICANT

Notice of Intent to Apply for Air Quality Construction Permit

You are receiving this notice because the New Mexico Air Quality Control Act (20.11.41.13B NMAC) requires any owner/operator proposing to construct or modify a facility subject to air quality regulations to provide public notice by certified mail or electronic mail to designated representatives of recognized neighborhood associations and coalitions within 0.5-mile of the property on which the source is or is proposed to be located.

This notice indicates that the owner/operator intends to apply for an Air Quality Construction Permit from the Albuquerque – Bernalillo County Joint Air Quality Program. Currently, no application for this proposed project has been submitted to the Air Quality Program. Applicants are required to include a copy of this form and documentation of mailed notices with their Air Quality Construction Permit Application.

Proposed Project Information

Applicant's name and address:
Nombre y domicilio del solicitante: SUMCO Phoenix Corporation, 9401 San Mateo Blvd. NE., Albuquerque, NM 87113

Owner / operator's name and address:
Nombre y domicilio del propietario u operador: SUMCO Phoenix Corporation, 9401 San Mateo Blvd. NE., Albuquerque, NM 87113

Contact for comments and inquires:
Datos actuales para comentarios y preguntas:

Name *(Nombre):* Jeff Homer, Rafael Velazquez

Address *(Domicilio):* 9401 San Mateo Blvd. NE, Albuquerque, NM 87113

Phone Number *(Número Telefónico)*: 480-473-6503, 480-473-6563

E-mail Address *(Correo Electrónico)*: Jeff.homer@sumcousa.com, Rafael.velazquez@sumcousa.com

Actual or estimated date the application will be submitted to the department:
Fecha actual o estimada en que se entregará la solicitud al departamento: 09/23/2022

Description of the source:
Descripción de la fuente: Natural gas combustion emissions from boilers and humidifiers, diesel emergency generator, particulate emissions from cooling towers, chemical emissions from process clean and dopants.

Exact location of the source or proposed source:
Ubicación exacta de la fuente o fuente propuesta: *SUMCO Phoenix Corporation, 9401 San Mateo Blvd. NE., Albuquerque, NM* 87113

Nature of business:
Tipo de negocio: *Expitaxial wafer manufacturing*

Process or change for which the permit is requested:
Proceso o cambio para el cuál de solicita el permiso: Chemical usage quantities have been updated to account for an increase in Anhydrous Hydrogen Chloride throughput from 122,385 lb/yr to 225,000 lb/yr.

Maximum operating schedule:
Horario máximo de operaciones: *24 hours per day, 7 days per week, 52 weeks per year.*

Normal operating schedule:
Horario normal de operaciones: *24 hours per day, 7 days per week, 52 weeks per year.*

Preliminary estimate of the maximum quantities of each regulated air contaminant the source will emit:
Estimación preliminar de las cantidades máximas de cada contaminante de aire regulado que la fuente va a emitir:

Air Contaminant *Contaminante de aire*	**Proposed Construction Permit** *Permiso de Construcción Propuesto*		**Net Changes (for permit modification or technical revision)** *Cambio Neto de Emisiones (para modificación de permiso o revisión técnica)*	
	pounds per hour *libras por hora*	tons per year *toneladas por año*	pounds per hour *libras por hora*	tons per year *toneladas por año*
CO	7.59	8.04	0.00	0.00
NOx	21.68	12.79	0.00	0.00
VOC	1.79	0.83	0.00	0.00
SO2	1.31	0.34	0.00	0.00
PM10	1.74	1.89	0.00	0.00
PM2.5	1.54	1.00	0.00	0.00
HAP	0.28	1.22	+0.13	+0.57

Questions or comments regarding this Notice of Intent should be directed to the Applicant. Contact information is provided with the Proposed Project Information on the first page of this notice. To check the status of an Air Quality Construction Permit application, call 311 and provide the Applicant's information, or visit www.cabq.gov/airquality/air-quality-permits.

The Air Quality Program will issue a Public Notice announcing a 30-day public comment period on the permit application for the proposed project when the application is deemed complete. The Air Quality Program does not process or issue notices on applications that are deemed incomplete. More information about the air quality permitting process is attached to this notice.

Air Quality Construction Permitting Overview

This is the typical process to obtain an Air Quality Construction Permit for Synthetic Minor and Minor sources of air pollution from the Albuquerque – Bernalillo County Joint Air Quality Program.

Step 1: Pre-application Meeting: The Applicant and their consultant must request a meeting with the Air Quality Program to discuss the proposed action. If air dispersion modeling is required, Air Quality Program staff discuss the modeling protocol with the Applicant to ensure that all proposed emissions are considered.

> **Notice of Intent from the Applicant:** Before submitting their application, the Applicant is required to notify all nearby neighborhood associations and interested parties that they intend to apply for an air quality permit or modify an existing permit. The Applicant is also required to post a notice sign at the facility location.

Step 2: Administrative Completeness Review and Preliminary Technical Review: The Air Quality Program has 30 days from the day the permit is received to review the permit application to be sure that it is administratively complete. This means that all application forms must be signed and filled out properly, and that all relevant technical information needed to evaluate any proposed impacts is included. If the application is not complete, the permit reviewer will return the application and request more information from the Applicant. Applicants have three opportunities to submit an administratively complete application with all relevant technical information.

> **Public Notice from the Department:** When the application is deemed complete, the Department will issue a Public Notice announcing a 30-day public comment period on the permit application. This notice is distributed to the same nearby neighborhood associations and interested parties that the Applicant sent notices to, and published on the Air Quality Program's website.
>
> During this 30-day comment period, individuals have the opportunity to submit written comments expressing their concerns or support for the proposed project, and/or to request a Public Information Hearing. If approved by the Environmental Health Department Director, Public Information Hearings are held after the technical analysis is complete and the permit has been drafted.

Step 3: Technical Analysis and Draft Permit: Air Quality Program staff review all elements of the proposed operation related to air quality, and review outputs from advanced air dispersion modeling software that considers existing emission levels in the area surrounding the proposed project, emission levels from the proposed project, and meteorological data. The total calculated level of emissions is compared to state and federal air quality standards and informs the decision on whether to approve or deny the Applicant's permit.

Draft Permit: The permit will establish emission limits, standards, monitoring, recordkeeping, and reporting requirements. The draft permit undergoes an internal peer review process to determine if the emissions were properly evaluated, permit limits are appropriate and enforceable, and the permit is clear, concise, and consistent.

> **Public Notice from the Department:** When the technical analysis is complete and the permit has been drafted, the Department will issue a second Public Notice announcing a 30-day public comment period on the technical analysis and draft permit. This second Public Notice, along with the technical analysis documentation and draft permit, will be published on the Air Quality Program's website, and the public notice for availability of the technical analysis and draft permit will only be directly sent to those who requested further information during the first comment period.

During this second 30-day comment period, residents have another opportunity to submit written comments expressing their concerns or support for the proposed project, and/or to request a Public Information Hearing.

Possible Public Information Hearing: The Environmental Health Department Director may decide to hold a Public Information Hearing for a permit application if there is significant public interest and a significant air quality issue. If a Public Information Hearing is held, it will occur after the technical analysis is complete and the permit has been drafted.

Step 4: Public Comment Evaluation and Response: The Air Quality Program evaluates all public comments received during the two 30-day public comment periods and Public Information Hearing, if held, and updates the technical analysis and draft permit as appropriate. The Air Quality Program prepares a response document to address the public comments received, and when a final decision is made on the permit application, the comment response document is published on the Air Quality Program's website and distributed to the individuals who participated in the permit process. If no comments are received, a response document is not prepared.

Step 5: Final Decision on the Application: After public comments are addressed and the final technical review is completed, the Environmental Health Department makes a final decision on the application. If the permit application meets all applicable requirements set forth by the New Mexico Air Quality Control Act and the federal Clean Air Act, the permit is approved. If the permit application does not meet all applicable requirements, it is denied.

Notifications of the final decision on the permit application and the availability of the comment response document is published on the Air Quality Program's website and distributed to the individuals who participated in the permit process.

The Department must approve a permit application if the proposed action will meet all applicable requirements and if it demonstrates that it will not result in an exceedance of ambient air quality standards. Permit writers are very careful to ensure that estimated emissions have been appropriately identified or quantified and that the emission data used are acceptable.

The Department must deny a permit application if it is deemed incomplete three times, if the proposed action will not meet applicable requirements, if estimated emissions have not been appropriately identified or quantified, or if the emission data are not acceptable for technical reasons.

For more information about air quality permitting, visit www.cabq.gov/airquality/air-quality-permits

Adam Erenstein

From: Adam Erenstein
Sent: Wednesday, September 21, 2022 11:42 AM
To: mgriffee@noreste.org; reynolds@unm.edu; sect.dist4@gmail.com; uri.bassan@noreste.org; rpmartinez003@gmail.com; haederle@yahoo.com; grumpyeh46@comcast.net; peggynorton@yahoo.com; newmexmba@aol.com; nvcabq@gmail.com; cefisher.67@gmail.com; ltcaudill@comcast.net; ejoneil40@gmail.com; gober621@comcast.net
Cc: Velazquez, Rafael; Homer, Jeff
Subject: Notification of SUMCO Phoenix Corp. Permit Revision
Attachments: PN by Applicant Memo SUMCO 09092022 (1).pdf; SUMCO Notice of Intent form.pdf

Dear Neighborhood Association/Coalition Representative,

The local air quality Construction Permit regulation 20.11.41 NMAC requires that registered representatives of neighborhood associations and coalitions within a half mile of a facility proposing to apply for an air quality permit application be notified in advance of permit application. Therefore, you are receiving the required attached public notice regarding the SUMCO Phoenix Corporation's proposed Significant Revision to the ATC Permit 0444-M4 for the Albuquerque Facility. This facility is located at 9401 San Mateo Blvd NE, Albuquerque, NM 87113.

Please see the attached Notice of Intent to Construct form for more information and instructions if you might have related comments or questions.

Regards,

Adam Erenstein
Principal Consultant, Manager of Consulting Services

NEW ADDRESS: 9400 Holly Avenue NE, Building 3, Suite B, Albuquerque, NM 87122
Email: aerenstein@trinityconsultants.com

Connect with us: LinkedIn / Facebook / Twitter / YouTube / trinityconsultants.com

Stay current on environmental issues. Subscribe today to receive Trinity's free *EHS Quarterly*.

Proposed Air Quality Construction Permit

Permiso de Construcción de Calidad del Aire Propuesto

1. **Applicant's Name:**
   Nombre del solicitante: SUMCO PHOENIX CORPORATION
   Owner or Operator's Name:
   Nombre del Propietario u Operador: SUMCO PHOENIX CORPORATION
2. **Actual or Estimated Date the Application will be Submitted to the Department:**
   Fecha Actual o Estimada en que se Entragará la Solicitud al Departamento: 9/23/2022
3. **Exact Location of the Source or Proposed Source:**
   Ubicación Excata de la Fuente o Fuente Propuesta: 9401 SAN MATEO BLVD NE, ALBUQUERQUE, NM 87113
4. **Description of the Source:**
   Descripción de la Fuente: BOILERS, HUMIDIFIERS, EMERGENCY GEN, COOLING TOWERS, CHEMICAL EMISSIONS
   Nature of Business:
   Tipo de Negocio: EXPITAXIAL WAFER MANUFACTURING
   Process or change for which a permit is requested:
   Proceso o cambio para el cuál se solicita el permiso: INCREASE ANHYDROUS HYDROGEN CHLORIDE THROUGHPUT FROM 122,385 lb/yr TO 225,000 lb/yr

Preliminary estimate of the maximum quantities of each regulated air contaminant the source will emit:
Estimación preliminar de las cantidades máximas de cada contaminante de aire regulado que la fuente va a emitir:

Air Contaminant *Contaminante de Aire*	Proposed Construction Permit *Permiso de Construcción Propuesto*		Net Change Emissions (for permit modification) *Cambio Neto de Emisiones (para modificación de permiso)*	
	Pounds per hour *libras por hora*	Tons per year *toneladas por año*	Pounds per hour *libras por hora*	Tons per year *toneladas por año*
NO_x	21.68	12.79	Ø	Ø
CO	7.59	8.04	Ø	Ø
VOC	1.79	0.83	Ø	Ø
SO_2	1.31	0.34	Ø	Ø
PM_{10}	1.74	1.89	Ø	Ø
$PM_{2.5}$	1.54	1.00	Ø	Ø
HAP	0.28	1.22	+0.13	+0.57

5. **Maximum Operating Schedule:**
   Horario Máximo de Operaciones: 24/7/365
   Normal Operation Schedule:
   Horario Normal de Operaciones: 24/7/365
6. **Current Contact Information for Comments and Inquiries**
   Datos actuales para Comentarios y Preguntas
   Name *(Nombre):* JEFF HOMER; RAFAEL VELAZQUEZ
   Address *(Domicilio):* 9401 SAN MATEO BLVD NE, ALBUQUERQUE, NM 87113
   Phone Number *(Número Telefónico):* (480) 473-6503; (480) 473-6563
   Email Address *(Correo Electrónico):* JEFF.HOMER@SUMCOUSA.COM; RAFAEL.VELAZQUEZ@SUMCOUSA.COM

Call 311 for additional information concerning this project, the Air Quality Program, or to file a complaint.
Llame al 311 para obtener información adicional sobre este proyecto, del Programa de Calidad del Aire, o para presentar una queja.
Gọi 311 để biết thêm thông tin hoặc để khiếu nại về dự án này, Chương Trình Chất Lượng Không Khí

City of Albuquerque, Environmental Health Department, Air Quality Program – Stationary Source Permitting
Ciudad de Albuquerque, Departamento de Salud Ambiental, Programa de Calidad del Aire - Permisos para Fuentes Inmóviles
(505) 768-1972, aqd@cabq.gov

THIS SIGN SHALL REMAIN POSTED UNTIL THE DEPARTMENT TAKES FINAL ACTION ON THE PERMIT APPLICATION.
ESTE AVISO DEBERÁ DERMANTENERSE PUESTO HASTA QUE EL DEPARTAMENTO TOME UNA DECISIÓN SOBRE LA SOLICITUD DE PERMISO

SUMCO
SUMCO
ALBUQUERQUE

Facility Map and Source Locations

Trinity Consultants

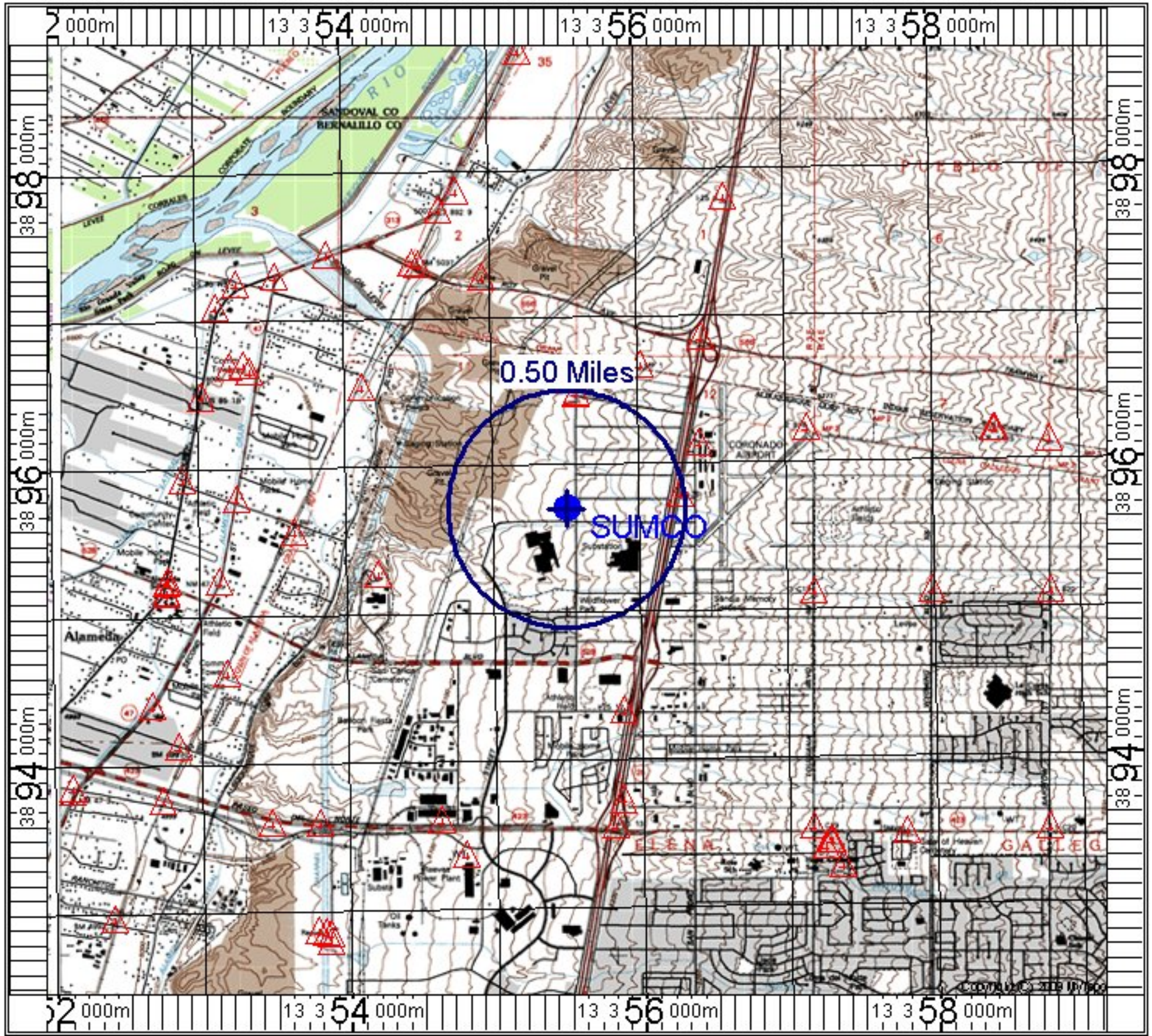

Map Name: ALAMEDA
Print Date: 01/26/21

Scale: 1 inch = 3,333 ft.
Map Center: 13 0355564 E 3895628 N

Horizontal Datum: WGS84

8
FS3
CVDU1
CVDU2
10
11
18
17
5 & 9
15
16
CVDU3
FS1
14
Google Earth
© 2020 Google
200 ft
N

Air Emissions Calculations

Trinity Consultants

SUMCO Phoenix Corporation-Albuquerque Facility

Emergency Diesel Generator

Unit No. : 8
Make/Manufacturer: Cummins NTA8550G3
Capacity: 535 hp
399 kW
Hours of Operation: 500 hr/yr

	NO_X	CO	VOC	SO_2	PM	Units	Notes
Emission Factors	0.031	6.68E-03	2.47E-03	2.05E-03	2.20E-03	lb/hp-hr	AP-42 Table 3.3-2
Emissions	16.59	3.57	1.32	1.10	1.18	lb/hr	EF [lb/hp-hr] * Capacity [hp]
	4.15	0.89	0.33	0.27	0.29	tpy	Hourly Emissions [lb/hr] * Hours of Operation [hr/yr]
Safety Factors	20%	70%	20%	20%	20%	%	Conservative Assumptions
Emissions w/ Safety Factor	19.9	6.1	1.6	1.3	1.4	lb/hr	
	5.0	1.5	0.4	0.3	0.4	tpy	

Boilers

Input Information			
Unit(s):	5 & 9		
Description:	8.27 MMbtu/hr boilers		
Heat input:	8.27	MMBtu/hr	Estimated heat input
Fuel heat value:	1,020	Btu/scf	Estimated heating value
Fuel sulfur content:	0.2	gr/100scf	Estimated for sweet field gas
Operating hours:	8760	hours/year	
Fuel Usage:	8107.8	scf/hr	

Emission Calculations per Unit							
	NO_x	**CO**	**VOC**	**SO_2[1]**	**PM[2]**	**Unit**	Notes
Emission Factors	100	84	5.5		7.6	lb/MMscf	AP-42 Table 1.4-1 & 2
	100.0	84.0	5.5		7.6	lb/MMscf	Adjusted EF, per footnote a in Tables 1.4-1 and 1.4-2
Total Emissions	0.81	0.68	0.045	0.0046	0.062	lb/hr[3]	
	3.55	2.98	0.20	0.020	0.27	tons/year[4]	

[1] SO_2 lb/hr = Sulfur (gr/100scf) * 1lb/7000gr * Rating (MMBtu/hr)*10^6 (Btu/MMBtu) / Heat value (Btu/scf) * 64/32

[2] Assumes TSP = PM_{10} = $PM_{2.5}$

[3] lb/hr emissions calculated using the following methods:

NO_x, CO, VOC and PM lb/hr = EF (lb/MMscf) * Rating (MMBtu/hr) / Heat value (Btu/scf)

[4] Tons/year = lb/hr * Operating hours * 1 ton/2000lb

Parameters	Value	Unit	Note
Input heat rate	8.27	MMBtu/hr	Estimated
Fuel heat value	1,020	Btu/scf	Estimated, nominal
Fuel rate	8.11	Mscf/hr	Input heat rate / fuel heat value
Annual fuel usage	71.02	MMscf/yr	8760 actual hrs/yr operation

Parameters	Value	Unit	Note
Input heat rate	8.27	MMBtu/hr	
Exhaust temp	600	°F	Engineering Estimate
Stack height	55.35	ft	Engineering Estimate
Stack diameter	2.00	ft	Engineering Estimate
Exhaust flow (Actual)	6207	acfm	Flow (acfm) = Flow (dscfm) * (Stack Temp + 460) / 528 * 29.92 / Site Bar. Pres. / (100% - Moisture%)
	103.45	acfs	Flow (acfs) - Flow (acfm) / 60s/min
Exhaust velocity	32.93	ft/sec	Exhaust flow / stack area
F factor	8,710	dscf/MMBtu	40 CFR 60, Appendix A-7, Table 19-2
Moisture	10	%	Nominal
Exhaust flow (Dry)	2301.9	dscfm	Flow (dscfm) = heat input * O2 F * [20.9 / (20.9 - O2%)]
O_2 %	10	%	
Site Elevation	5,151	ft MSL	
Pressure at Elevation	24.75	in Hg	

SUMCO Phoenix Corporation Albuquerque Facility

Humidifiers

Input Information			
Unit(s):	10 & 11		
Description:	800 Mbtu/hr humidifiers		
Heat input:	0.8	MMBtu/hr	Estimated heat input
Fuel heat value:	1,020	Btu/scf	Estimated heating value
Fuel sulfur content:	0.2	gr/100scf	Estimated for sweet field gas
Operating hours:	8760	hours/year	
Fuel Usage:	784.3	scf/hr	

Emission Calculations per Unit							
	NO_x	**CO**	**VOC**	**SO_2[1]**	**PM[2]**	**Unit**	Notes
Emission Factors	100	84	5.5		7.6	lb/MMscf	AP-42 Table 1.4-1 & 2
	100.0	84.0	5.5		7.6	lb/MMscf	Adjusted EF, per footnote a in Tables 1.4-1 and 1.4-2
Total Emissions	0.078	0.066	0.0043	4.48E-04	0.0060	lb/hr[3]	
	0.34	0.29	0.019	0.0020	0.026	tons/year[4]	

[1] SO_2 lb/hr = Sulfur (gr/100scf) * 1lb/7000gr * Rating (MMBtu/hr)*10^6 (Btu/MMBtu) / Heat value (Btu/scf) * 64/32

[2] Assumes TSP = PM_{10} = $PM_{2.5}$

[3] lb/hr emissions calculated using the following methods:

NO_x, CO, VOC and PM lb/hr = EF (lb/MMscf) * Rating (MMBtu/hr) / Heat value (Btu/scf)

[4] Tons/year = lb/hr * Operating hours * 1 ton/2000lb

Parameters	Value	Unit	Note
Input heat rate	0.80	MMBtu/hr	Estimated
Fuel heat value	1,020	Btu/scf	Estimated, nominal
Fuel rate	0.78	Mscf/hr	Input heat rate / fuel heat value
Annual fuel usage	6.87	MMscf/yr	8760 actual hrs/yr operation

Parameters	Value	Unit	Note
Input heat rate	0.80	MMBtu/hr	
Exhaust temp	300	°F	Engineering Estimate
Stack height	29.66	ft	Engineering Estimate
Stack diameter	0.33	ft	Engineering Estimate
Exhaust flow (Actual)	431	acfm	Flow (acfm) = Flow (scfm) * (Stack Temp + 460) / 528 * 29.92 / Site Bar. Pres. / (100% - Moisture%)
	7.18	acfs	Flow (acfs) - Flow (acfm) / 60s/min
Exhaust velocity	83.89	ft/sec	Exhaust flow / stack area
O_2 F factor	8,710	dscf/MMBtu	Method 9
Moisture	10	%	Nominal
Exhaust flow (Dry)	222.7	dscfm	Flow (dscfm) = heat input * O2 F * [20.9 / (20.9 - O2%)]
O_2 %	10	%	
Site Elevation	5,151	ft MSL	
Pressure at Elevation	24.75	in Hg	

Cooling Towers

Units: 14 through 18

Unit No.		14	15	16	17	18	Notes
Circulation Rate, Q_{circ}	gpm	1656	500	1656	500	2100	Engineer Estimate
Drift Rate, Q_{drift}	%	0.02	0.02	0.02	0.02	0.02	Default value from NMED guidance[1]
Dissolved Solids, TDS	ppm	350	350	350	350	350	ABCWUA TDS Limit
TSP[1]	lb/hr	0.057	0.017	0.057	0.017	0.073	
	tpy	0.25	0.076	0.25	0.076	0.32	
PM_{10}[1]	lb/hr	0.051	0.015	0.051	0.015	0.065	
	tpy	0.22	0.068	0.22	0.068	0.28	
$PM_{2.5}$[1]	lb/hr	2.98E-04	9.01E-05	2.98E-04	9.01E-05	3.78E-04	
	tpy	0.0013	3.95E-04	0.0013	3.95E-04	0.0017	

Notes:

[1] Emissions were calculated using guidance provided in the NMED technical memorandum for "Calculating TSP, PM10, and PM 2.5 from Cooling Towers" dated 9/9/2013.

$PM_{Total} = TDS * Q_{circ} * Q_{drift}$

The cooling tower water TDS mass concentration ABCWUA maximum limit is reported as 350 ppm. To allow for operational flexibility, particle size multipliers for liquid with 1000 ppm TDS are conservativley referenced.

SUMCO Phoenix Corporation Albuquerque Facility

Chemical Usage

Hydroflouric Acid		
CAS No. 7664-39-3		
Usage	2,254	gal/yr
Concentration	49%	by volume
Volume	1104	gal/yr
Density	1150	g/L
Density	9.56	lb/gal
Annual Weight	5	tpy
Control Efficiency	99%	
Controlled Weight	0.012	lb/hr
Controlled Weight	0.053	tpy

Anhydrous Hydrogen Chloride		
CAS No. 7647-01-0		
Annual Weight	225,000	lb/yr
Annual Weight	113	tpy
Control Efficiency	99%	
Controlled Weight	0.26	lb/hr
Controlled Weight	1.13	tpy

Diborane		
CAS No. 19287-45-7		
Usage	30,600	cf/yr
	866.50	m^3/yr
Concentration	0.50%	by volume
Volume	4.332	m^3/yr
Density	1.22	kg/m^3
Annual Weight	5.83E-03	tpy
Control Efficiency	99%	
Controlled Weight	1.33E-05	lb/hr
Controlled Weight	5.83E-05	tpy

Phosphine		
CAS No. 7803-51-2		
Usage	20400	cf/yr
	577.66	m^3/yr
Concentration	0.020%	by volume
Volume	0.116	m^3/yr
Density	1.38	kg/m^3
Annual Weight	1.76E-04	tpy
Control Efficiency	99%	
Controlled Weight	4.01E-07	lb/hr
Controlled Weight	1.76E-06	tpy

Arsine		
CAS No. 7784-42-1		
Usage	16320	cf/yr
	462.13	m^3/yr
Concentration	0.50%	by volume
Volume	2.311	m^3/yr
Density	3.48	kg/m^3
Annual Weight	8.86E-03	tpy
Control Efficiency	99%	
Controlled Weight	2.02E-05	lb/hr
Controlled Weight	8.86E-05	tpy

Nitric Acid		
CAS No. 7697-37-2		
Usage	192	gal/yr
Concentration	70%	by volume
Volume	134	gal/yr
Density	1510	g/L
Density	12.55	lb/gal
Annual Weight	0.843	tpy
Control Efficiency	99%	
Controlled Weight	0.0096	lb/hr
Controlled Weight	0.042	tpy

Chemical Usage

Chemical Usage Emission Summary

	Total HAP		Hydroflouric Acid [1]		Anhydrous Hydrogen Chloride [2]		Diborane [3]		Phosphine [3]		Arsine [3]		Nitric Acid [1]	
Unit No.	**pph**	**tpy**	**pph**	**tpy**	**pph**	**tpy**	**pph**	**tpy**	**pph**	**tpy**	**pph**	**tpy**	**pph**	**tpy**
1	0.022	0.095	0.012	0.053	-	-	-	-	-	-	-	-	0.010	0.042
2	6.65E-06	2.91E-05	-	-	-	-	6.65E-06	2.91E-05	2.01E-07	8.79E-07	1.01E-05	4.43E-05	-	-
3, 4, 6, 12, 13	0.26	1.13	-	-	0.26	1.13	6.65E-06	2.91E-05	2.01E-07	8.79E-07	1.01E-05	4.43E-05	-	-
Total	**0.28**	**1.22**	**0.012**	**0.053**	**0.26**	**1.13**	**1.33E-05**	**5.83E-05**	**4.01E-07**	**1.76E-06**	**2.02E-05**	**8.86E-05**	**0.0096**	**0.042**

[1] Hydroflouric and nitric acids are only used in the cleaning processes represented under Unit 1.

[2] Anhydrous Hydrogen Chloride is only used in the processed represented under Units 3, 4, 6, 12, and 13

[3] Dopants (Diborane, Phosphine, and Arsine) are used in Units 2, 3, 4, 6, 12, and 13. The usage of these chemicals is partitioned such that 50% of the emissions are associated with Unit 2 and 50% of the emissions are associated with Units 3, 4, 6, 12, and 13.

Supporting Information

Cummins NTA855-Q3 Exhaust Parameters (Unit 8)

AP-42 Section 3.3 (Unit 8)

AP-42 Section 1.4 (Units 5, 9, 10, and 11)

Unilux Boiler Specification Data (Units 5 and 9)

PURE Humidifier Data (Units 10 and 11)

NMED Technical Memorandum – "Calculating TSP, PM-10 and PM-2.5 from Cooling Towers" (Units 14 to 18)

ABCWUA TDS Limits Documentation (Units 14 to 18)

Scrubber Control Efficiency (Units 3, 4, 6, 12, and 13)

Trinity Consultants

Exhaust Emission Data Sheet

350DFCC

60 Hz Diesel Generator Set

ENGINE

Model:	Cummins NTA855-G3		Bore:	5.5	in. (140 mm)
Type:	4 Cycle, In-line 6 Cylinder Diesel		Stroke	6	in. (152 mm)
Aspiration:	Turbocharged and Aftercooled		Displacement:	855	cu. in. (14.0 liters)
Compression Ratio:	14:1				
Emission Control Device:	Turbocharger and Aftercooler, with Variable Timing				

PERFORMANCE DATA	STANDBY	PRIME
BHP @ 1800 RPM (60 Hz)	535	480
Fuel Consumption (gal/Hr)	25.3	22.9
Exhaust Gas Flow (CFM)	3190	2785
Exhaust Gas Temperature (ºF)	980	970

Table 3.3-1. EMISSION FACTORS FOR UNCONTROLLED GASOLINE AND DIESEL INDUSTRIAL ENGINES[a]

Pollutant	Gasoline Fuel (SCC 2-02-003-01, 2-03-003-01)		Diesel Fuel (SCC 2-02-001-02, 2-03-001-01)		EMISSION FACTOR RATING
	Emission Factor (lb/hp-hr) (power output)	Emission Factor (lb/MMBtu) (fuel input)	Emission Factor (lb/hp-hr) (power output)	Emission Factor (lb/MMBtu) (fuel input)	
NO_x	0.011	1.63	0.031	4.41	D
CO	6.96 E-03[d]	0.99[d]	6.68 E-03	0.95	D
SO_x	5.91 E-04	0.084	2.05 E-03	0.29	D
PM-10[b]	7.21 E-04	0.10	2.20 E-03	0.31	D
CO_2[c]	1.08	154	1.15	164	B
Aldehydes	4.85 E-04	0.07	4.63 E-04	0.07	D
TOC					
Exhaust	0.015	2.10	2.47 E-03	0.35	D
Evaporative	6.61 E-04	0.09	0.00	0.00	E
Crankcase	4.85 E-03	0.69	4.41 E-05	0.01	E
Refueling	1.08 E-03	0.15	0.00	0.00	E

[a] References 2,5-6,9-14. When necessary, an average brake-specific fuel consumption (BSFC) of 7,000 Btu/hp-hr was used to convert from lb/MMBtu to lb/hp-hr. To convert from lb/hp-hr to kg/kw-hr, multiply by 0.608. To convert from lb/MMBtu to ng/J, multiply by 430. SCC = Source Classification Code. TOC = total organic compounds.

[b] PM-10 = particulate matter less than or equal to 10 :m aerodynamic diameter. All particulate is assumed to be # 1 :m in size.

[c] Assumes 99% conversion of carbon in fuel to CO_2 with 87 weight % carbon in diesel, 86 weight % carbon in gasoline, average BSFC of 7,000 Btu/hp-hr, diesel heating value of 19,300 Btu/lb, and gasoline heating value of 20,300 Btu/lb.

[d] Instead of 0.439 lb/hp-hr (power output) and 62.7 lb/mmBtu (fuel input), the correct emissions factors values are 6.96 E-03 lb/hp-hr (power output) and 0.99 lb/mmBtu (fuel input), respectively. This is an editorial correction. March 24, 2009

Table 1.4-1. EMISSION FACTORS FOR NITROGEN OXIDES (NO_x) AND CARBON MONOXIDE (CO) FROM NATURAL GAS COMBUSTION[a]

Combustor Type (MMBtu/hr Heat Input) [SCC]	NO_x[b]		CO	
	Emission Factor ($lb/10^6$ scf)	Emission Factor Rating	Emission Factor ($lb/10^6$ scf)	Emission Factor Rating
Large Wall-Fired Boilers (>100) [1-01-006-01, 1-02-006-01, 1-03-006-01]				
Uncontrolled (Pre-NSPS)[c]	280	A	84	B
Uncontrolled (Post-NSPS)[c]	190	A	84	B
Controlled - Low NO_x burners	140	A	84	B
Controlled - Flue gas recirculation	100	D	84	B
Small Boilers (<100) [1-01-006-02, 1-02-006-02, 1-03-006-02, 1-03-006-03]				
Uncontrolled	100	B	84	B
Controlled - Low NO_x burners	50	D	84	B
Controlled - Low NO_x burners/Flue gas recirculation	32	C	84	B
Tangential-Fired Boilers (All Sizes) [1-01-006-04]				
Uncontrolled	170	A	24	C
Controlled - Flue gas recirculation	76	D	98	D
Residential Furnaces (<0.3) [No SCC]				
Uncontrolled	94	B	40	B

[a] Reference 11. Units are in pounds of pollutant per million standard cubic feet of natural gas fired. To convert from $lb/10^6$ scf to $kg/10^6$ m^3, multiply by 16. Emission factors are based on an average natural gas higher heating value of 1,020 Btu/scf. To convert from $1b/10^6$ scf to lb/MMBtu, divide by 1,020. The emission factors in this table may be converted to other natural gas heating values by multiplying the given emission factor by the ratio of the specified heating value to this average heating value. SCC = Source Classification Code. ND = no data. NA = not applicable.

[b] Expressed as NO_2. For large and small wall fired boilers with SNCR control, apply a 24 percent reduction to the appropriate NO_X emission factor. For tangential-fired boilers with SNCR control, apply a 13 percent reduction to the appropriate NO_X emission factor.

[c] NSPS=New Source Performance Standard as defined in 40 CFR 60 Subparts D and Db. Post-NSPS units are boilers with greater than 250 MMBtu/hr of heat input that commenced construction modification, or reconstruction after August 17, 1971, and units with heat input capacities between 100 and 250 MMBtu/hr that commenced construction modification, or reconstruction after June 19, 1984.

TABLE 1.4-2. EMISSION FACTORS FOR CRITERIA POLLUTANTS AND GREENHOUSE GASES FROM NATURAL GAS COMBUSTION[a]

Pollutant	Emission Factor ($lb/10^6$ scf)	Emission Factor Rating
CO_2[b]	120,000	A
Lead	0.0005	D
N_2O (Uncontrolled)	2.2	E
N_2O (Controlled-low-NO_X burner)	0.64	E
PM (Total)[c]	7.6	D
PM (Condensable)[c]	5.7	D
PM (Filterable)[c]	1.9	B
SO_2[d]	0.6	A
TOC	11	B
Methane	2.3	B
VOC	5.5	C

[a] Reference 11. Units are in pounds of pollutant per million standard cubic feet of natural gas fired. Data are for all natural gas combustion sources. To convert from $lb/10^6$ scf to $kg/10^6$ m^3, multiply by 16. To convert from $lb/10^6$ scf to 1b/MMBtu, divide by 1,020. The emission factors in this table may be converted to other natural gas heating values by multiplying the given emission factor by the ratio of the specified heating value to this average heating value. TOC = Total Organic Compounds. VOC = Volatile Organic Compounds.

[b] Based on approximately 100% conversion of fuel carbon to CO_2. $CO_2[lb/10^6 \text{ scf}] = (3.67)(CON)(C)(D)$, where CON = fractional conversion of fuel carbon to CO_2, C = carbon content of fuel by weight (0.76), and D = density of fuel, 4.2×10^4 $lb/10^6$ scf.

[c] All PM (total, condensible, and filterable) is assumed to be less than 1.0 micrometer in diameter. Therefore, the PM emission factors presented here may be used to estimate PM_{10}, $PM_{2.5}$ or PM_1 emissions. Total PM is the sum of the filterable PM and condensible PM. Condensible PM is the particulate matter collected using EPA Method 202 (or equivalent). Filterable PM is the particulate matter collected on, or prior to, the filter of an EPA Method 5 (or equivalent) sampling train.

[d] Based on 100% conversion of fuel sulfur to SO_2.
Assumes sulfur content is natural gas of 2,000 grains/10^6 scf. The SO_2 emission factor in this table can be converted to other natural gas sulfur contents by multiplying the SO_2 emission factor by the ratio of the site-specific sulfur content (grains/10^6 scf) to 2,000 grains/10^6 scf.

Specification Data

UNILUX

MULTIPASS FLEXIBLE WATERTUBE BOILERS

HOT WATER BOILERS

Unilux Advanced Manufacturing, LLC
30 Commerce Park Drive
Niskayuna, NY 12309
518.344.7490

Fax: (518) 344-7495
E-mail: info@uniluxam.com
Web Site: www.uniluxam.com

"From commercial comfort to industrial process"

UNILUX HOT WATER BOILER CAPACITIES:

BOILER MODEL W	MAXIMUM FUEL INPUT BTU/HR IN THOUSANDS
100	1250
150	1750
200	2200
250	2750
300	3000
350	3750
400	4300
500	5400
600	6250
700	7235
800	8270
900	9300
1000	10330
1200	12400
1400	14470
1600	16530
1800	18600
2000	20670
2500	25000
2900	29000
3000	34000
3500	38000

ORDER NUMBER PROCEDURE: Example – ZF 300WG

- 300 — BOILER MODEL
- W — WATER (W) LOW PRESSURE STEAM (LS) HIGH PRESSURE STEAM (HS)
- G — NAT. GAS, MIXED OR LP (G) NO. 2 OR LIGHTER OILS (L) COMB. GAS/LIGHT OIL (LG)
- ZW – Welded Boiler Tube
- ZF – Ferrule Boiler Tube

SPECIFICATIONS ARE SUBJECT TO CHANGE WITHOUT NOTICE. DIMENSIONS MUST BE CONFIRMED FOR CONSTRUCTION.

STANDARD EQUIPMENT:
• PRESSURE GAUGE • THERMOMETER
• LWCO • RELIEF VALVES • BURNER OPERATING AND SAFETY TEMPERATURE CONTROLS

UNILUX REPRESENTATIVE:

ALL BURNER EQUIPMENT UL, CSA APPROVED

Deionized, Deiineralized, or Reverse Osmosis

"GXDDR" Series Gas Fired Humidifier

Looking for an alternative to electrically generated steam humidification? Concerned about using chemically treated boiler steam for direct humidification? If so, PURE's "GXDDR" Series (patent no. 6,705,535) Gas Fired Humidifiers are exactly what you're looking for.

Indoor air quality issues concerning the use of boiler steam for direct humidification have resulted in a growing apprehension for the use of "steam injection" type humidifiers. The possible carry-over of chemical additives and odor created within some boiler systems are being addressed in an effort to improve the indoor air quality for new and existing buildings. The alternative, electric humidifiers, can be prohibitive due to the higher energy costs associated with electrically generated steam, versus the typically lower energy cost of natural gas. For these reasons, PURE has developed the "GXDDR" Series Gas Fired Humidifier.

The "GXDDR" Series Humidifiers utilize a stainless steel heat exchanger, which allows for a gas power burner to be used as the energy source for producing steam from pure water.

The steam produced by the "GXDDR" Series Humidifier is free from chemical or mineral carry-over, providing pure humidification for today's stringent indoor air quality requirements. PURE's highly efficient heat exchanger produces combustion efficiencies up to 84%, as well as providing simplified maintenance. The unique side entry heat exchanger can be removed without removing the cover and injection tube system, and provides a large clean-out opening which extends the full length of the humidifier. Furthermore, the unique design allows for easy removal of the gas burners.

The "GXDDR" Series humidifier is designed to operate on absolutely pure water, such as deionized, demineralized, or reverse osmosis water. Since water mineral build-up does not occur with pure water, there is no need for an automatic drain system or cleaning. These units are practically maintenance free.

The water level is maintained with a special float valve (in lieu of the tri-probe electronic water controller which is used on the standard water "GX" Series) and a low water float switch is incorporated to provide a low water interlock with the steam control valve. Both floats are protected from water turbulence by an internal baffle.

PURE's commitment to quality and ease of maintenance is further illustrated by the use of pressure clamps that secure the heat exchanger to the reservoir and eliminate the need for through-the-wall threaded fasteners. Precise modulation of the humidifier output is maintained by a high quality gas burner which modulates the gas flow into the heat exchanger.

Each humidifier is supplied with an INTAC® control system mounted in a NEMA-12 enclosure. The INTAC® microprocessor control system provides constant monitoring of the water level and safety systems, as well as providing a gas valve interlock. This will prevent operation, should any of the safety circuits open.

The "GXDDR" humidifiers come standard with free standing support legs, factory mounted control panel, factory insulation and a DCT-927 drain tempering kit. A flexible hose kit is available for remote mounting of the humidifier from the injection tube. Multiple injection tubes are available for improved dissipation of the steam in large ducts or manufactured air handling systems. Multiple humidifiers can be manifolded together to a single injection tube system to provide increased capacity on large air volume projects.

The versatility of the "GXDDR" Series will allow you to design them into any system simply, efficiently and reliably.

Our results are comforting

PURE Ihnnid!fier

Capacities, Electrical & Weights

Sheet No.
GXDDR-2

This humidifier is a forced combustion type that can be used with natural gas or liquid propane. The burner can be easily remo vedto accesslhe side entry exchanger for cleaning. It is designed to work with low-pressure gas between 5"W:G.cu1Ytb'14",w:0. :

Unit Capacities in Pounds per Hour {kg/hr)t
Weights in lbs. {kg) and Electrical Specification

Model No.	Steam Capacity Lb/Hr (kg/Hr)	No. of Burners	*BTU Input	Exhaust Manifold Vent Size (cm)	Shipping Weight (kg)	Operating Weight(kg)	120 Volt, 60 Hz Full Load Amps
GXDDR-3	110 (49.9)	1	150,000	4" (10.2)	201 lbs. (91.2)	420 lbs. (190.5)	5.0
GXDDR-4	300 (136.1)	1	400,000	4" (10.2)	390 lbs. (176.9)	710 lbs. (322.1)	5.0
GXDDR-8	600 (272.2)	2	800,000	6" (15,2)	827 lbs. (375.1)	1391 lbs. (630.9)	10.0
GXDDR-12	900 (408.2)	3	1,200,000	8" (20.3)	1125 lbs.(510.3)	2072 lbs. (939.9)	15.0

t Actual humidifier capacity may vary due to the heat loss from the humidifier reservoir. The ambient air temperature, air velocity and injection tube system will affect the rate of heat loss from the reservoir.

* Altitude adjustment:
100% up to 2000'
Over 2000', 4% de-rate per 1000'

Gas Piping Pressure Drop Data

EQUIVALENT LENGTH OF STRAIGHT PIPE IN FEET									
	20	30	40	20	60	80	100	150	200
CFH GAS WITH .2" PRESSURE DROP									
Pipe Size in Inches									
3/4"	152	120	105	93	84	73	66	54	45
1"	300	250	210	190	180	150	135	110	75
1 1/4"	520	425	360	325	300	260	230	190	165
1 1/2"	800	690	560	500	480	410	370	300	260
2"	1700	1400	1200	1100	1000	850	750	600	540
2 1/2"	3000	2500	2100	1900	1800	1550	1375	1100	950
EQUIVALENT LENGTHS OF STANDARD PIPE IN FEET FOR LISTED FITTINGS									
Fitting Type	3/4	1	11/4	1 1/2	2	2 1/2	Nominal		
Std. Tee	2.4	5.5	7.5	9	12	13.5	Pipe Size		
Std. Elbow	4.4	2.7	3.7	4.5	5.5	6.1	in Inches		

Gas Input CFH
for GXDDR-Series Humidifiers

Model No.	Max BTU/Hr Input	MaxCFH (Nat. Gas)	MaxCFH (Propane)
GXDDR-3	150,000	150	60
GXDDR-4	400,000	400	160
GXDDR-8	800,000	800	320
GXDDR-12	1,200,000	1200	480

To Humidifier

Freeze Protection. A factory installed temperature sensor shall be mounted onto the humidifier reservoir. The system shall maintain the water temperature above freezing.

Standby Water Temperature Sensing. Consists of a temperature sensor to maintain water temperature at a selected level for fast response upon a call for humidity.

Injection Tubes

Injection tube(s) and Flexible Hose. Each unit shall include one or more 10 ft. (305 cm) sections of 1 ½" (3.8 cm) 1.0. flexible hose and a 1 ½" (3.8 cm) 0.0. stainless steel injection tube long enough to extend across the duct. Steam ports shall direct steam upward into the airflow. The reservoir cover shall have a matching connection so the flexible hose can be connected with two stainless steel hose clamps. A two-piece duct plate shall be provided to seal the duct opening.

Fast-Pac Multiple Tube Assembly. Tube assembly consists of a stainless steel supply/condensate header with a 3/4"-NPT drain connection and horizontal 1 1/2"0 stainless steel injection tubes.

Insty-Pac Multiple Tube Assembly. Tube assembly consists of a steam supply/separator header constructed of stainless steel with steam inlet, condensate drain outlet and steam jacketed injection tubes welded to header. Steam jacketed injection tubes constructed of stainless steel with punched steam ports of the proper size and spacing to deliver the maximum specified capacity.

To Control Cabinet

Control Panel Door Lock. Control cabinet shall be provided with a factory installed key lock on the cabinet door.

Controls

VAV Control. The INTAC® software shall accept a modulating high-limit humidity input and space controlling RH input and modulate the heater output to prevent over saturation of the supply air due to changes in the quantity of airflow. A compatible space and duct humidity sensor shall be shipped loose for field installation.

Air Flow Proving Switch. A diaphragm operated air flow proving switch with adjustable range of .05" W.C. to 12.0" W.C. shall be provided for field installation. Switch rating shall be 2.5 amps at 120V.

Duct High-Limit. A high-limit humidistat shall be provided for duct installation. The high-limit shall be field set to prevent over saturation within the supply duct.

Venting

Sealed Combustion Air Kit. Consists of a 5" round stainless steel adaptor that allows outside air to be piped directly to the intake of the burner for combustion.

Outdoor Enclosure. Curb/slab mounted weather proof enclosure. Humidifier is factory installed and shipped in enclosure, ready for field gas, water and electrical connections.

An INTAC® programmable electronic microprocessor humidifier control system shall be mounted and pre-wired to the humidifier control panel door. All humidifier electrical, ground and control terminal connections shall be enclosed in an ETL listed NEMA 12 enclosure. The INTAC® controller shall provide the following standard features:

- Self-diagnostics and system verification on start-up.
- Evaporating reservoir water level verification, control and safety interlock. The controller shall be compatible with all water types.
- Automatic reservoir drain and flush system. The controller shall periodically drain and flush the reservoir based ori Accumulated Run Time, Elapsed Time or by an externally triggered dry contact closure (except RO/DI water).
- Cold water tempering prevents excessively hot water from draining during an automatic or seasonal drain cycle.
- Seasonal Drain system shall automatically drain the humidifier reservoir after a selected "NON-USE" period. The controller shall automatically reset the humidifier on a call for humidity (if utilized).
- Safety circuit input terminals including over-temperature shut down.
- Terminal connections to accept virtually all control input signals. Input control range is selected as an "ON-SCREEN" prompt.
- User adjustable controlling and high-limit RH PID functions with adjustable parameters (if utilized).
- o Door-mounted display and user interface. Provides two lines of system messaging on a vacuum fluorescent display screen, LED operational indication and keypad parameter entry system.
- e Vacuum fluorescent display brightness is adjustable.
- o Adjustable input signal filter to attenuate noisy control input signal.
- o Numbered screen prompts for set-up and service identification.
- Keypad lock-out with user selected access levels.
- " Time-delayed scrolling display loop will begin cycling ten minutes after no buttons have been pressed and will display the next item for 30 seconds before continuing down the list - displays system parameters including: Low and High RH Alarms, System Faults, System Status, Set Point and Actual Space RH, Set Point and Actual Duct RH (optional), Outdoor Air Temperature (optional), Percent Power Output, Humidifier Output (in lbs/hr or kg/hr), Accumulated Run Time, Time to Clean timer, Water Level, Water Temperature Set Point and Actual (optional) and Control Type.
- o INTAC® controller will automatically shut down when the ambient temperature is outside of designed operating temperature range.
- Full Networking and BAS communication capability. Communication connections shall provide two-way communication via EIA-485 connected Modbus between the INTAC® controller and the Building Automation System (BAS) (if utilized).
- o High/Low humidity deviation alarm contacts (modulating control only).
- Multiple humidifiers can run off of one control signal from a BAS system. Humidifiers can be set up to run in parallel or in series.
- Safety Circuit/System Fault/Low Water alarm contacts.
- Flash Memory - allows system upgrades through EIA -485 terminal connections with a laptop computer and access to e-mail.

OPTIONAL FEATURES

A. Variable air volume (VAV) anticipation control. The INTAC® software shall accept a modulating high-limit humidity input and space controlling RH input, then modulates the heater output to prevent over saturation of the supply air due to changes in the quantity of air flow. A compatible humidity sensor shall be shipped loose for field installation.

8. Cold weather relative humidity reset. The INTAC® software shall accept a modulating temperature input and automatically reduce the space RH set-point on a drop in the outside temperature. The reduction of the RH set-point during cold weather periods prevents damage due to interior window condensation.

C. Reservoir thermocouple water temperature control. The INTAC® software provides standby water temperature sensing and freeze protection.

D. A remote wall mount INTAC® user interface keypad/ display module shall be furnished

Reference the "Specification Sample" for the humidifier base specification.

Humidifier

1. The humidifier (patent no. 6,705,535) shall be forced draft combustion gas burner type humidifier as manufactured by PURE Humidifier Co. of Chaska, Minnesota.

2. The humidifier shall be tested and approved by ETL/ETL-C Testing Laboratories, Inc to AGNCGA standards.

3. The humidifier shall have an evaporating reservoir with a gasket sealed cover which is capable of operating at pressures of at least 19"-48 cm (W.C.) without steam or water leaks. The reservoir shall be made of type 304 stainless steel with welded joints.

4. The humidifier shall be designed to facilitate easy removal of the gas heat exchanger for periodic scale removal and inspection. The cover and gas heat exchanger shall be secured to the unit by the use of quick release clamps. The gas heat exchanger shall be removable from the side of the humidifier without disturbing the cover or injection tube system's steam supply piping.

5. The gas heat exchanger shall be constructed of type 304 stainless steel with 2" round heat transfer tubes. Tubes shall be self cleaning via expansion and contraction of tubes. Coating of tubes is not required.

6. The humidifier shall require only 2 sides for service access.

7. The forced draft combustion burner shall be capable of expelling flue gases up to 100 ft (31 m) without the use of a power vent (sidewall or roof vented).

8. Unit shall be covered (except front face) with 3/4" (1.90 cm) thick fiberglass duct insulation. Insulation material shall have aluminum facing.

9. Provide support legs made of 1 ¼" x 1 ¼" x ¼" (3.2 cm) angle Iron and painted with enamel gray paint. Distance from humidifier bottom to floor shall be 24" (61 cm).

10. Humidifier control cabinet shall be factory mounted and wired to the face of the humidifier reservoir.

11. A stainless steel float operated' low water cut-off switch shall be provided. The float switch shall provide positive low water cut-out of the burner.

12. A stainless steel float operated water fill valve mounted on the top near the front shall be provided. The fill valve shall provide automatic refilling of the humidifier reservoir. The water inlet shall be located to allow a minimum water gap of 1-1/2" (3.81 cm).

13. The humidifier shall have a 3/4" (1.9 cm) over-flow pipe to prevent overfilling of the humidifier reservoir.

14. The humidifier shall be provided with an ETL listed JIG NEMA 12 control cabinet shipped factory mounted and wired to the reservoir. The control cabinet shall be made of 14 gauge steel with ANSI 61 gray polyester powder coating, continuous hinge and oil-resistant gasket. The panel shall include a factory wired sub-panel with gas valve interlock, fused control circuit transformer, numbered terminal block and main power fuse(s).

15. The control cabinet shall have a factory wired time delay relay circuit. The delay circuit shall prevent cycling of the low water interlock circuit due to water fluctuations within the humidifier reservoir.

16. An INTAC® programmable electronic microprocessor humidifier control system shall be mounted and pre-wired to the humidifier control panel door. The INTAC® controller shall provide low water cut-off and safety switch interlock functions.

Reference the "Options" page for a description of the options which can be added to the base specification.

Proposed Unit .8mmBtu

PURE Humidifier

Dimensions & Layout
GXDDR-8

Sheet No.
GXDDR-4

Required Clearance:
For recommended service and maintenance purposes the following clearances should be maintained:

- Right side, see Top View for required clearance
- Front side, NEC requires 36" clearance to control cabinet
- Left side, 6" for access
- Rear, 6" for access
- Top, 17" for cover and float plate assembly removal

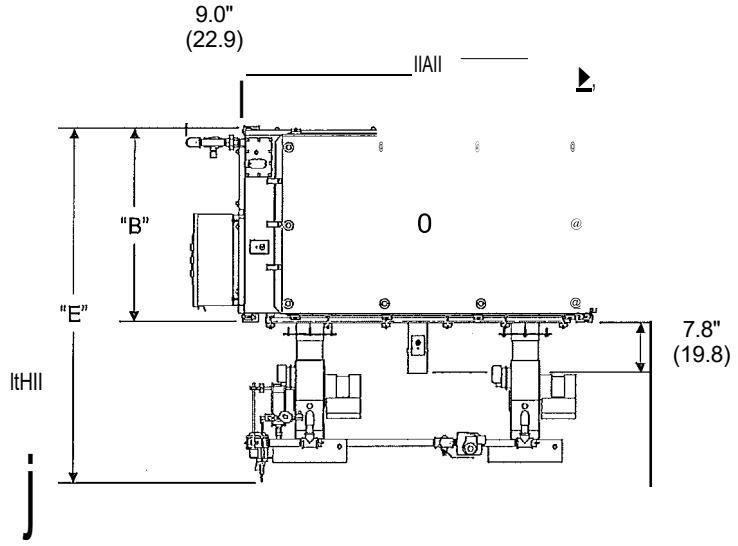

Clearance required for exchanger removal

Top View

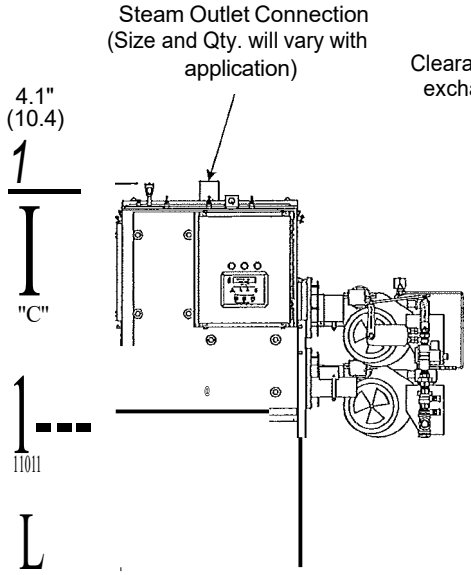

Front View

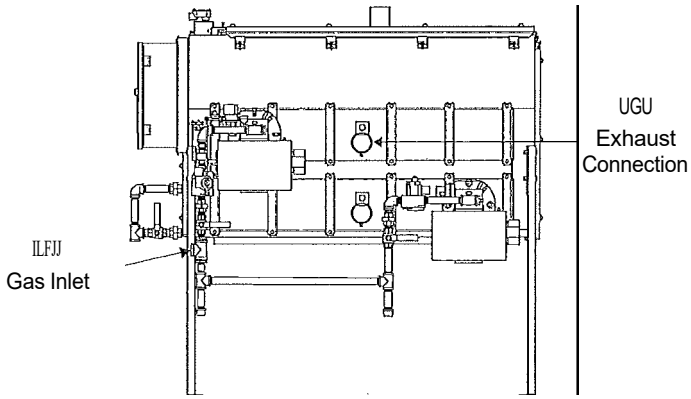

Right Side View

Unit Dimensions in Inches (cm)

Model No.	Dim."A"	Dlm."B"	Dim."C"	Dim."D"	Dim."E"	Dim."F"	Dlm."G"	Dim."H"
GXDDR-8	54.0" (137.2)	30.1" (76.5)	32.5" (82.6)	24.0" {60.9)	54.7" (138.9)	1"-NPT	3.0" (7.6)	66.0" (167.6)

Heat exchangers have a top and bottom. There is a break (crease) on the bottom side of the heat exchanger, Do not install heat exchanger upside-down.
All dimensions are approximate and subject to change at manufacturer's discretion.

NEW MEXICO
ENVIRONMENT DEPARTMENT

Air Quality Bureau

525 Camino de los Marquez, Suite 1
Santa Fe, New Mexico, 87505
Phone (505) 476-4300 Fax (505) 476-4375
www.env.nm.gov

SUSANA MARTINEZ
Governor
JOHN A. SANCHEZ
Lieutenant Governor

RYAN FLYNN
Cabinet Secretary-Designate
BUTCH TONGATE
Deputy Secretary

TECHNICAL MEMORANDUM

DATE: September 9, 2013

TO: All Permitting Staff

FROM: Daren Zigich

THROUGH: Ted Schooley, Permit Program Manager
Ned Jerabek, Major Source Section Manager

SUBJECT: Calculating TSP, PM-10 and PM-2.5 from Cooling Towers

The goal of this memo is to offer a Department approved step-by-step approach for calculating particulate emissions from cooling towers. While the Department encourages using this approach, other approaches, that do not use a droplet settling ratio may be approved on a case-by-case basis.

Due to the variability of methods used by permittees to estimate particulate emissions from cooling towers, a consistent, defensible approach is warranted. For example, some permittees have used a droplet settling ratio from Reference 3 to lower the total potential emissions rate of total particulate matter (PM_{total}). This is unacceptable due to the following:

1. Particulate settling is not appropriate since any verification testing would be completed inside the cooling tower fan stack. All particulate mass that can be measured by an EPA reference method and are emitted to the atmosphere shall be counted as particulate emissions. Particle size distribution can then be used to modify the emission rate of each regulated particulate size.
2. The Department is not aware of information that verifies the droplet settling data is representative for arid climates where evaporation rates are high.
3. The droplet size distribution and % mass data from Reference 1 only consider droplets up to 600 microns. Reference 3 states that settling only exists for droplets greater than 450 microns. Reference 1 lists the % mass of droplets greater than 450 microns to be less than 1 percent of the total mass.

4. Reference 2 test data shows that towers with significant drift droplet diameters greater than 600 microns usually suffer from poor installation of the drift eliminator or from poor water distribution due to issues with the tower packing. Large droplets may indicate that the assumed or guaranteed drift eliminator efficiency is not being met. Providing emissions credit for poor installation, operation or maintenance runs counter to general Department practice.
5. References 1 and 2 make no reference to and assign no credit for the settling theory stated in Reference 3.

For the above reasons, the Reference 3 settling ratio is not an acceptable emissions reduction approach.

Acceptable Calculation Method

Cooling tower particulate emissions are a function of the Drift rate and the concentration of dissolved solids present in the water. The Drift rate is normally listed as a percentage of the circulating water flow rate of the cooling tower.

Step 1 – Establish maximum water circulation rate (Q_{circ}) for the cooling tower. This is usually dependent on the capacity of the circulation pumps and the plant cooling system and should be reported as gallons per minute (gpm). The circulation rate is the sum of the circulation rates for each cell in the tower and thus represents the total flow for the tower.

Step 2 – Establish Drift rate (Q_{drift}) of the cooling tower. This information is dependent on the drift eliminator design and is usually supplied by the tower manufacturer. If manufacturer data is unavailable, the standard drift of 0.02 percent, listed in AP-42, should be used.

Step 3 – Establish maximum Total Dissolved Solids concentration (TDS) in the circulating cooling water. This is dependent on the facility's operations. TDS should be reported as parts per million (ppm) or mg/l.

Step 4 – Calculate total potential hourly particulate emissions (PM_{total}) in pounds per hour (lbs/hr).

$$PM_{total} = TDS(mg/l) \times \frac{1(lbs/mg)}{453{,}600} \times 3.785(l/gal) \times Q_{circ}(gpm) \times \frac{Q_{drift}(\%Q_{circ})}{100} \times 60(min/hr)$$

Example: TDS = 3000 ppm or mg/l, Q_{circ} = 50,000 gpm, Q_{drift} = 0.004%

PM_{total} = 3000 x (1/453,600) x 3.785 x 50,000 x (0.004/100) x 60

PM_{total} = 3.0 lbs/hr

Step 5 – Estimate particulate size distribution of the PM_{total} to determine potential emissions of TSP/PM, PM_{10} and $PM_{2.5}$.

The current estimating technique used in References 1 and 2 employs a formula for determining a potential particulate size (i.e. diameter) for a given set of variables. The variables are:

d_d = Drift droplet diameter, microns
C_{TDS} = Concentration of TDS in the circulating water, ppm x 10^{-6}
ρ_w = Density of Drift droplet, g/cm^3
ρ_{salt} = Density of particle, g/cm^3

The equation for determining particle size/diameter (d_p), in microns is:

$$d_p = \frac{d_d}{(\rho_{salt} / \rho_w C_{TDS})^{1/3}}$$

The tables below list particle size related to droplet size for various concentrations (1000 ppm to 12,000 ppm) of TDS in the circulating cooling water. The density of the water droplet (ρ_w) is assumed to be 1.0 g/cm3 (based on density of pure water) and the average density of the TDS salts is assumed to be 2.5 g/cm3. This assumed density is selected based on the average density of common TDS constituents, $CaCO_3$, $CaSO_4$, $CaCl_2$ NaCl, Na_2SO_4, and Na_2CO_3. If actual circulating water constituents are available, that data may be used to estimate the dissolved solids average density.

To determine the droplet size that generates particulate matter of the applicable regulated diameters, TSP/PM (defined as 30 microns or less per NM AQB definition[1]), PM10 and PM2.5, find the column in the table that matches the maximum circulating water TDS concentration and read the values associated with the PM2.5, PM10 and TSP/PM boxes. Boxed values are not exactly equal to the applicable sizes, but are the values greater than and closest to the applicable sizes, given the listed water droplet values from Reference 1.

The far right column of each table provides mass distribution data from Reference 1. The values indicate what percent of the total particulate mass emission, calculated in Step 4, is associated with the applicable particulate size. Read the value that is on the same line (same color) as the applicable particulate size associated with the specified TDS concentration column.

Note: Although the relationship between droplet size and percent mass is not linear, a linear interpolation of the tabulated data is acceptable between two adjacent rows (particle size) to determine an estimate of percent mass for a specific particle size (i.e. PM30, PM10 and PM2.5). Particle sizes for droplets with a non-listed TDS ppm concentration may be calculated using the equation in Step 5.

Example: Continuing from Step 4,

PM_{total} = 3.0 lbs/hr
C_{TDS} = 3000 ppm

From Table:

$PM_{2.5}$:	d_d = 30	%Mass = 0.226%
PM_{10}:	d_d = 110	%Mass = 70.509%
TSP/PM:	d_d = 270	%Mass = 96.288%

The mass emission of each applicable particulate size is:

$PM_{2.5} = PM_{total}(\%Mass/100) = 3.0(0.00226) = 0.007$ lbs/hr
$PM_{10} = 3.0(.70509) = 2.115$ lbs/hr
TSP/PM = 3.0(.96288) = 2.889 lbs/hr

[1]Definition of TSP for purposes of permitting emission sources, 11/2/09, see P:\AQB-Permits-Section\NSR-TV-Common\Permitting-Guidance-Documents – Index & Links document

Size Distribution

1000 ppm (TDS)		2000 ppm		3000 ppm		% Mass
d_d	d_p	d_d	d_p	d_d	d_p	≤
10	0.7387304	10	0.930527	10	1.0650435	0
20	1.4774608	20	1.8610539	20	2.130087 PM2.5	0.196
30	2.2161912	30	2.7915809 PM2.5	30	3.1951306 PM2.5	0.226
40	2.9549216 PM2.5	40	3.7221079	40	4.2601741	0.514
50	3.693652	50	4.6526349	50	5.3252176	1.816
60	4.4323825	60	5.5831618	60	6.3902611	5.702
70	5.1711129	70	6.5136888	70	7.4553046	21.348
90	6.6485737	90	8.3747427	90	9.5853917	49.812
110	8.1260345	110	10.235797 PM10	110	11.715479 PM10	70.509
130	9.6034953	130	12.096851	130	13.845566	82.023
150	11.080956 PM10	150	13.957905	150	15.975653	88.012
180	13.297147	180	16.749485	180	19.170783	91.032
210	15.513339	210	19.541066	210	22.365914	92.468
240	17.72953	240	22.332647	240	25.561045	94.091
270	19.945721	270	25.124228	270	28.756175	94.689
300	22.161912	300	27.915809	300	31.951306 TSP/PM30	96.288
350	25.855564	350	32.568444 TSP/PM30	350	37.276523	97.011
400	29.549216	400	37.221079	400	42.601741	98.34
450	33.242868 TSP/PM30	450	41.873714	450	47.926958	99.071
500	36.93652	500	46.526349	500	53.252176	99.071
600	44.323825	600	55.831618	600	63.902611	100

Albuquerque Bernalillo County Water Utility Authority

Water Quality Report 2019

Distribution Zone 13

Definitions & Terms Notes & Sources of Substances

Regulatory Compliance Monitoring at EPTDS

Metals	Sample Collection Years	Units	Detection	Zone 13	City-Wide	Maximum Contaminant Level (MCL)	MCL Goal
Arsenic	2017	PPB	Average Range	0	2 0 - 9	10	Zero
Barium	2017	PPM	Average Range	0	0.02 0 - 0.2	2	2
Chromium	2017	PPB	Average Range	0	1 0 - 7	100	100
Minerals							
Fluoride	2017	PPM	Average Range	0.35	0.49 0.25 - 1.18	4	4
Nutrients							
Nitrate	2019	PPM	Average Range	0.23	0.35 0.06 - 3.25	10	10
Organics							
Total Xylenes	2019	PPM	Average Range	0	0.0005 0 - 0.00057	10	10
Radionuclides							
Radium 226 + 228	2014 - 2017	pCi/L	Average Range	0.26	0.1794 0.02 - 0.41	5	Zero
Gross Alpha Particle Activity	2014 - 2017	pCi/L	Average Range	0.3	0.8 0.1 - 2.5	15	Zero
Uranium	2014 - 2017	PPB	Average Range	0	2 0 - 9	30	Zero

Voluntary Comprehensive Monitoring in Distribution

(Samples taken every three months, 2019 results)

		Zone 13				
Metals	**Units**	**Minimum**	**Average**	**Maximum**	**City Average**	**MCL**
Arsenic	PPB	0	1	3	1 0 - 8	10
Chromium	PPB	0	0	1	1 0 - 4	100
Iron	PPM	0	0.003	0.03	0.009 0 - 0.16	0.3 a
Minerals						
Fluoride	PPM	0.50	0.62	0.79	0.62 0.37 - 1	4
Nutrients						
Nitrate	PPM as N	0.00	0.00	0.00	0.13 0 - 2.32	10
General Chemistry						
Alkalinity	PPM as CaCO3	64	87.4	115.8	96 64 - 142	~
Bicarbonate	PPM as CaCO3	63	87.1	115.4	96 63 - 141	~
Calcium	PPM	46	56	68	53 23 - 74	~
Chloride	PPM	28	36	41	34 14 - 54	250 a
Hardness	grains/gallon	7.8	9.6	11.6	9.1 4.4 - 12.7	~
Magnesium	PPM	3.8	5.6	7.3	5.6 2.5 - 7.9	~
Potassium	PPM	0.0	2.1	3.4	3 0 - 7	~
Silica	PPM as SiO2	16	22	28	27 16 - 66	~
Sodium	PPM	0.15	19	30	25 0.15 - 68	~
Sulfate	PPM	56	75	106	72 36 - 116	250 a
Total Dissolved Solids	PPM	234	278	350	277 188 - 368	500 a
Conductance	micromhos/cm	368	455	580	482 310 - 662	~
Free Chlorine Residual	PPM	0.8	1.04	1.31	1 0.3 - 1.4	~
pH	Standard Units	7.3	7.5	7.8	7.7 7.2 - 8.3	~
Temperature	Fahrenheit	48.2	63.2	83	62 37 - 88	~

a- Represents the USEPA Secondary Maximum Contaminant Level (SMCL). Secondary Drinking Water Standards are unenforceable federal guidelines regarding taste, odor, color and certain other non-aesthetic effects of drinking water. USEPA recommends them as reasonable goals, but federal law does not require water systems to comply with them.

INFO@AIRGARD.NcT 408.573.0701

AIRGARD

?ROOL'CTS TECH DATA C>\SE STUDIES Ae!OUTUS CONTACT US

"GREEN" THINKING

AIRG D isc:,:, mmjt(ec i10 using lhi!d' pariy testing.laCS' to validate our rformance on awi e range-of gases.

Safely eliminates toxins and corrosives

INLETS

He ted/CVO
Combining on intcmollyhcoted, tenon linedandlnsulat&d inlet design wm,our "utomat&d plunger, this scrubbercan reduce yourscrubber relateddowntown to zero.

Poly Etch / CVO
Hlghly efflclent 93s s.crvbbln9 with patented gas Inlet devices that minirniz8 -restrictions.

HighTampar.:iitura Inlet
Forhigh temperature gas stream up to 220"C.

Epitaxial
Airgard specialized gas entry devicethat minimizes Inlet restrictions andan au1omated gas inlet plunger thatextend& the himds..on malntenance Interval to every 6 months.

PROCESSES/ GASES

FAQs

FACILJTY DRAWINGS

CERTIFICATIONS

SEMIS2

ATEX

"The AJRGARD scrubber is our system of choice for Epi abatement."

~ Unattributed Author

P(ocesses/Gases

AIRGARD is committed to using third party testing labs to validate our performance on a wide range of gases.

	Chcrm-Jt".V	Coff'mon	C-IYIU	OU.		DRIZ	OU'S)vtOH
		Ammonia Arnmonia				>99.999% * >99.999% * >99.99% * >99.99% >98.9% *	COl'letnl/ll>Ofl.; M'
					FTUV	No pH control 94.5, 96.6, 97%	No pH control 25, 32, 50
n	Tll+H U 1) t	.....,M		1alm Chemiluminescence			
TE3	Td'U'lylblln	TU	1200iaa...				
HCl		-Mu6; le f tcl.-				....,.tK	
HCl SIHCl	T,kttl,o.f.. lafri•	TCS	220elm			""·11	
							<5.0
							<0.15
							<0.02
							<1.0
Se.t. 0CS	T,_ff9UI-..,wr.t ::Allcott'reu- Oklllete.U-	- - - - - ZIIO.... -Tn,nuonci. OleN.tf	OQ..				<0.01
TMO	Trimethylaluminum Trimethylgallium Trithylioallium	TIU 'DIC				.S,– .	<3.0 <1.0 <1.0

Click on this table to see larger view in pdf.

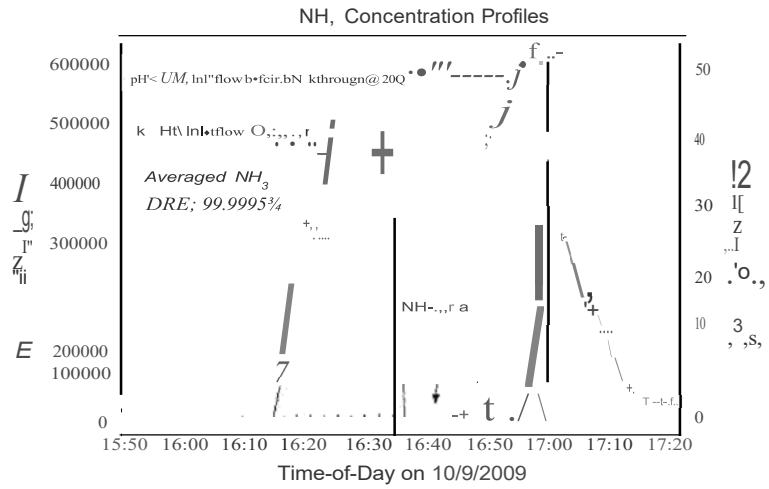

Processes/Gases

AIRGARDis committed to using third partytesting labs to validate our performance on a wide range of gases.

Gn	Cb!lffllcnt Name	Comrnot' t.la	CarTlot Flow	Ou Flow Rota	TH1 Method	DRE	Output Gu Concantnitlon PPM
HH,	Amrnf>M	AltltnOl'llt	59011ffl	▮▮▮▮▮▮	FTIR	>tt,tt1%·	<0.0t
HH,		Amtrionla	22011m	1k1m	FTIR	>tUtt% •	<0.0$
HH,	AmmOIN	Arnrnonla	80011,n	230.lm	FTIR	>9t.t9% •	<1.0
8Cl,	8otott Trlc.hkri6e	Bo«in Tf1chlotloH	200,tm.	100"c:m	FTIR	>9Ut+4	<O.OOS
C,,	Chlorine	Chlorin•	20011m	•••••		"9U'JC.•	<'1.0
C,,	C!Worlne	Chlorine	t1hlm	S0. 100,200$Ccm	FTUV	No pH OOIICtol M.S. tU,97%	HopHc:offlfGI 25,32,50
●●●	Hydr09eo	Hydt0f011	23011m	920=m	FTIR	>9t.9t%	<1.0
FZ	BtOfl"lidt A.....	Bromld• Fh,10!1nt	,•••••	,•••,	C:htmlluminMtfl«	• • ,••	<0.5
nos	Tll'Ml,iyt	TEOS	100.lm	1,klm	FTIR	n.,11.·	<10.0'
TtPO	Orthol.llkato Tritlhylpho1pluli.	T£PO	20011m	•••••	FTIR	>99,9"	<1.0
••••	Tft1thylbonite	TISB	20011m	3601ocm	FTIR	>9'9 ,9%	<1.0
WF,	T11"11'll•ll	T"no1ttn	20011,n	2.klm	FTIR	,•,•,•••	<0,1
HCI	Heufll,toride Chloride	Heuffuorld• HCI	22011m	•••••	EPA26	>99.	<0.10
HCI	HydrChloride	HCI	00.lm	:io.om	EPAU	>"99.	<OAO
SlHOC,	Iritl'llo,o.llano	TC:S	UOtlm	»ooecm	FTIR		<0,10
$ICM	Silton	• • ,•	52011m	1,klm	▮▮▮▮▮	>H, IIt, I,	<0,50
H2S	Tetractl HydroOt-tt Sutl'iff	Hyelr nS\IlfIdt	▮▮O▮▮▮▮	▮▮▮▮▮▮	▮▮▮▮▮	,•,••••• >tt.t%"	••••
H2:Se	Hyd«l9ea S.ll'fli<M	Hydroo-n Seknlch	220,1m	2.klm	FTIR	>tll:.6%"	<0.15
HF	Hydro,on Fluoride	H w Fl\lorf<le	200,1m	Uhlm	FTIR	>M.K	<0.02
TICM	Tbnlum	""Tkkle"	200,tm	33Stc:cm	FTIR	>99.9%	<1.0
SiH	Tttr•Ctlklrido SlllCOl'l Touon!!CWktt	SiliconTott,fluotlelo	20011m	2.W m	FTIR	>It.tin.	
OCS	Olctlloro1a.no	Oictllor	200,rm	▮▮.,,	FTIR	>9t.tl%	< 0, 0 1
TMA	TrimothyI1turnmum	▬	2u,1m	.Sh«m	FT1R	>99.5%	<1.0
TMG	TrirneltlyI91llium	TMG	21ihlm	1.blm	FT1R	,.99,5%	<1.0
T!G	TrlethylgMllum	T£G	18S1lm	31sccm	FTIR	>99.3%	<1.0

·-.-C:-.i

URS

pH Correlation During Cl:i Abatement

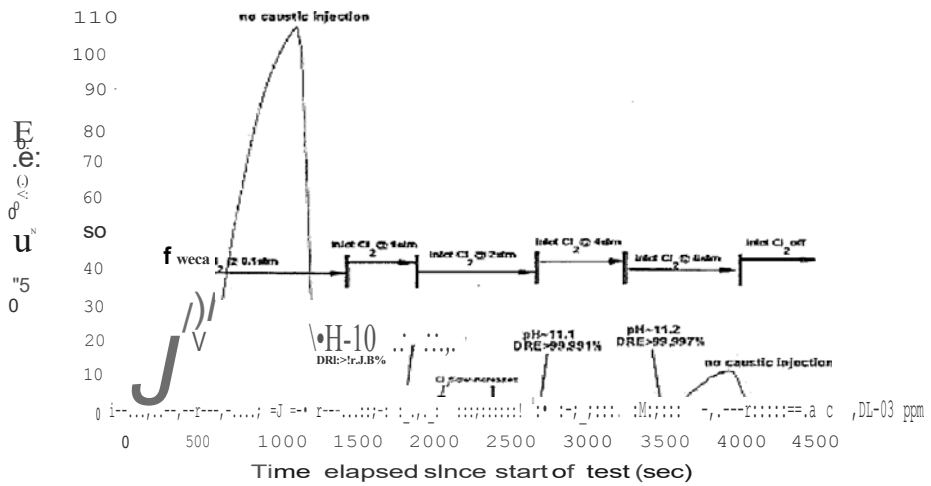

.URS

pH Co1Teiation during NH_3 abatement: y-axes in *pprnv,* x-axes in *time-of-day*
(Inlet NH" per trace, Outlet NH_3 lower trace)

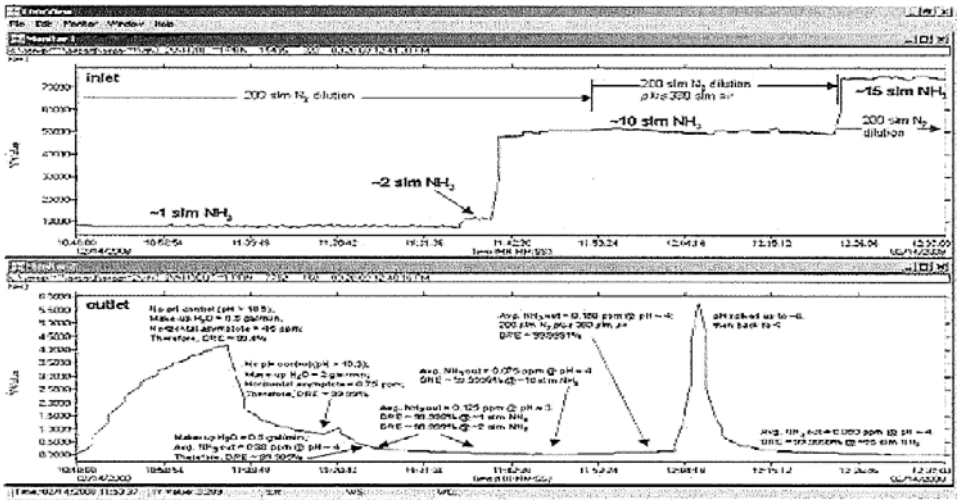

DCSabatement test; y-axes in P.P.n:!Y• x-axes in time-of-day
(ln(.,t DCS in red. outlet DCSin blue)

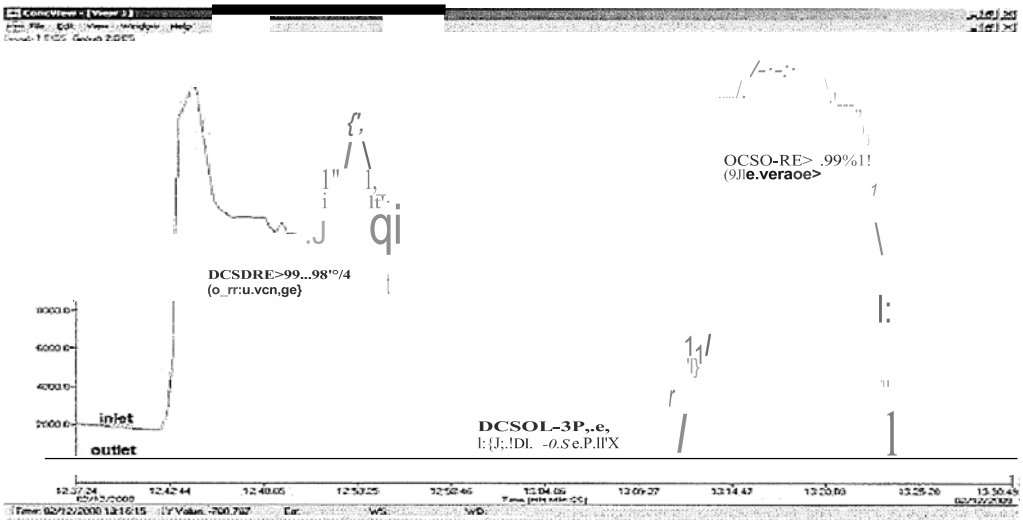

URS

SiF 4 abatement test: y-axes in pprnv, x-axes in time-of-day

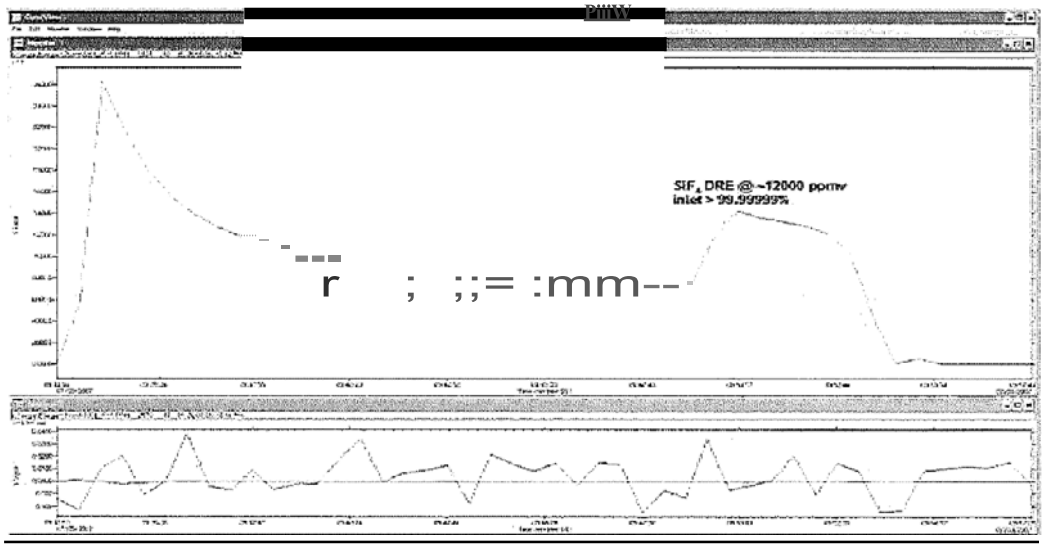

HBrAbatement Test: y-axis in ppmv, x-axis in time-of-day

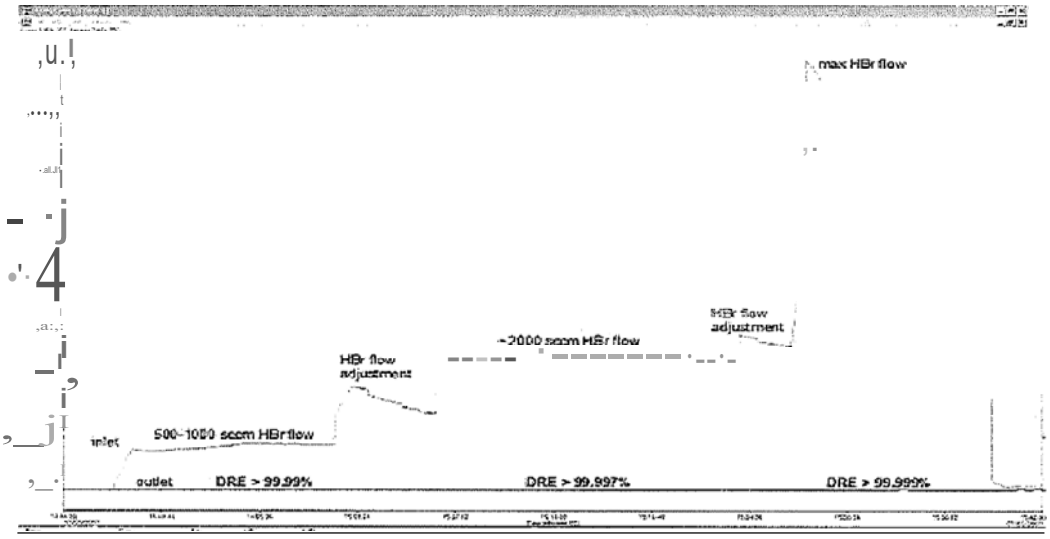

URS

WF$ abatement test:-y-axes in ppmv, x-ax•s in time-<>f-day

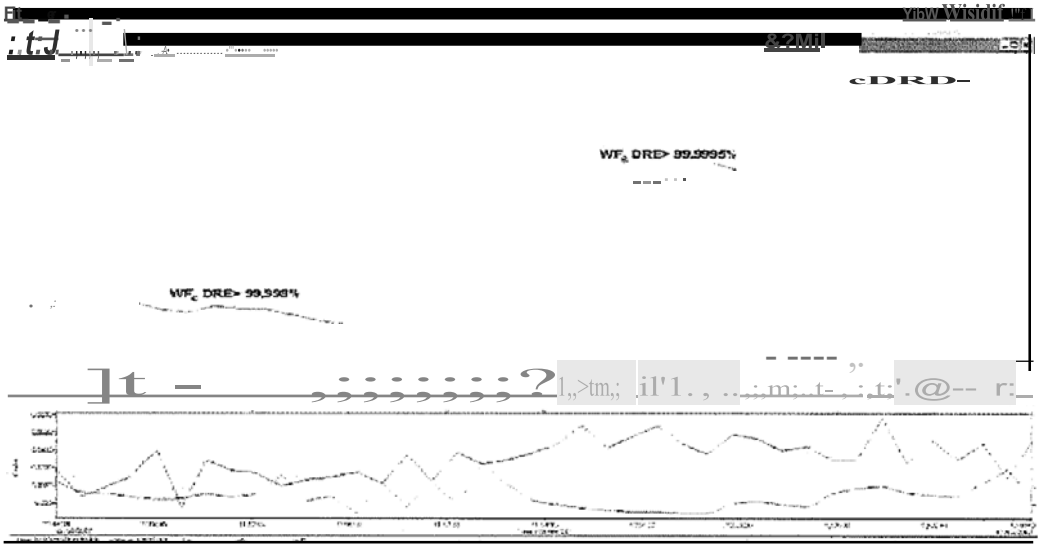

Material Safety Data Sheets

Trinity Consultants

Safety Data Sheet

Version 4.0 SDS Number 300000000077
Revision Date 12/08/2016 Print Date 03/18/2017

1. PRODUCT AND COMPANY IDENTIFICATION

Product name	:	Hydrogen chloride
Chemical formula	:	HCl
Synonyms	:	Hydrogen chloride
Product Use Description	:	General Industrial
Manufacturer/Importer/Distributor	:	Air Products and Chemicals, Inc 7201 Hamilton Blvd. Allentown, PA 18195-1501 GST No. 123600835 RT0001 QST No. 102753981 TQ0001
Telephone	:	1-610-481-4911 Corporate 1-800-345-3148 Chemicals Cust Serv 1-800-752-1597 Gases/Electronics Cust Serv
Emergency telephone number (24h)	:	800-523-9374 USA +1 610 481 7711 International

2. HAZARDS IDENTIFICATION

GHS classification

Gases under pressure - Liquefied gas.
Acute toxicity - Inhalation Category 3
Skin corrosion - Category 1A
Specific target organ toxicity - single exposure - Inhalation Category 3

GHS label elements

Hazard pictograms/symbols

Signal Word: Danger

Hazard Statements:

H280:Contains gas under pressure; may explode if heated.
H314:Causes severe skin burns and eye damage.
H331:Toxic if inhaled.
H335:May cause respiratory irritation.
EUH071:Corrosive to the respiratory tract.

Precautionary Statements:

Prevention	:	P261:Avoid breathing dust/fume/gas/mist/vapours/spray. P264:Wash hands thoroughly after handling. P280:Wear protective gloves/protective clothing/eye protection/face protection.
Response	:	P301+P330+P331 :IF SWALLOWED: rinse mouth. Do NOT induce vomiting. P303+P361+P353 :IF ON SKIN (or hair): Remove/Take off immediately all contaminated clothing. Rinse skin with water/shower. P305+P351+P338 :IF IN EYES: Rinse cautiously with water for several minutes. Remove contact lenses, if present and easy to do. Continue rinsing. P310 :Immediately call a POISON CENTRE/doctor.
Storage	:	P403+P233:Store in a well-ventilated place. Keep container tightly closed. P405:Store locked up.
Disposal	:	P501:Disposal of contents/container to be specified in accordance with regulations.

Hazards not otherwise classified

Use a back flow preventative device in the piping.
Do not open valve until connected to equipment prepared for use.
Use only with equipment of compatible materials of construction, rated for cylinder pressure.
Close valve after each use and when empty.
Reacts with water to form corrosive acids.
Symptoms may be delayed.
Wear self-contained breathing apparatus and protective suit.
Direct contact with liquid can cause frostbite.
May react violently with water.
Do not breathe gas.
Corrosive to eyes, respiratory system and skin.
Compressed liquefied gas.

3. COMPOSITION/INFORMATION ON INGREDIENTS

Components	CAS Number	Concentration (Volume)
Hydrogen Chloride	7647-01-0	100 %

Concentration is nominal. For the exact product composition, please refer to technical specifications.

4. FIRST AID MEASURES

General advice	:	Remove victim to uncontaminated area wearing self contained breathing apparatus. Keep victim warm and rested. Call a doctor. Apply artificial respiration if breathing stopped. Use chemically protective clothing.
Eye contact	:	In the case of contact with eyes, rinse immediately with plenty of water and seek medical advice. Keep eye wide open while rinsing.
Skin contact	:	Flush with copious amounts of water until treatment is available. Immediate medical treatment is necessary as untreated wounds from corrosion of the skin heal slowly and badly.
Ingestion	:	Ingestion is not considered a potential route of exposure.
Inhalation	:	Move to fresh air. If breathing has stopped or is labored, give assisted respirations. Supplemental oxygen may be indicated. If the heart has stopped, trained personnel should begin cardiopulmonary resuscitation immediately. Mouth to mouth resuscitation is not recommended. Use a barrier device. If unconscious place in recovery position and seek medical advice. In case of shortness of breath, give oxygen. Consult a doctor.
Most important symptoms/effects - acute and delayed	:	Irritating to eyes and respiratory system. Cough.Acute or chronic respiratory conditions.

Immediate Medical Attention and Special Treatment

Treatment	:	Treat bronchospasm and laryngeal edema if present. Observe for delayed chemical pneumonitis, pulmonary hemorrhage or edema. If exposed or concerned: Get medical attention/advice.

5. FIRE-FIGHTING MEASURES

Suitable extinguishing media	:	All known extinguishing media can be used.
Specific hazards	:	Product is nonflammable and does not support combustion. Upon exposure to intense heat or flame, cylinder will vent rapidly and or rupture violently. Product is nonflammable and does not support combustion. Use of water may result in the formation of very toxic aqueous solutions. Move away from container and cool with water from a protected position. Do not allow run-off from fire fighting to enter drains or water courses. Keep containers and surroundings cool with water spray. If possible, stop flow of product. Most cylinders are designed to vent contents when exposed to elevated temperatures.
Special protective equipment for fire-fighters	:	Use self-contained breathing apparatus and chemically protective clothing.

6. ACCIDENTAL RELEASE MEASURES

Personal Precautions, Protective Equipment, and Emergency Procedures	:	Evacuate personnel to safe areas. Ventilate the area. Approach suspected leak areas with caution. Use self-contained breathing apparatus or positive pressure air line with mask and escape pack in areas where concentration is unknown or above the exposure limits.
Environmental precautions	:	Should not be released into the environment. Prevent further leakage or spillage if safe to do so. Prevent from entering sewers, basements and workpits, or any place where its accumulation can be dangerous.
Methods for cleaning up	:	Ventilate the area. Wash contaminated equipment or sites of leaks wit h copious quantities of water. Reduce vapor with fog or fine water spray.
Additional advice	:	Large releases may require considerable downwind evacuation. If possible, stop flow of product. Increase ventilation to the release area and monitor concentrations. If leak is from cylinder or cylinder valve, call the emergency telephone number. If the leak is in the user's system, close the cylinder valve, safely vent the pressure, and purge with an inert gas before attempting repairs.

7. HANDLING AND STORAGE

Handling

Carbon steel, stainless steel, Monel or copper are suitable materials of construction when no moisture is present. Hastelloy, platinum or gold offer good resistance to corrosion when moisture is present. Use equipment rated for cylinder pressure. Cylinders should be stored upright with valve protection cap in place and firmly secured to prevent falling or being knocked over. Protect cylinders from physical damage; do not drag, roll, slide or drop. Do not allow storage area temperature to exceed 50°C (122°F). Only experienced and properly instructed persons should handle compressed gases/cryogenic liquids. Before using the product, determine its identity by reading the label. Know and understand the properties and hazards of the product before use. When doubt exists as to the correct handling procedure for a particular gas, contact the supplier. Do not remove or deface labels provided by the supplier for the identification of the cylinder contents. When moving cylinders, even for short distances, use a cart (trolley, hand truck, etc.) designed to transport cylinders. Leave valve protection caps in place until the container has been secured against either a wall or bench or placed in a container stand and is ready for use. Use an adjustable strap wrench to remove over-tight or rusted caps. Before connecting the container, check the complete gas system for suitability, particularly for pressure rating and materials. Before connecting the container for use, ensure that back feed from the system into the container is prevented. Ensure the complete gas system is compatible for pressure rating and materials of construction. Ensure the complete gas system has been checked for leaks before use. Employ suitable pressure regulating devices on all containers when the gas is being emitted to systems with lower pressure rating than that of the container. Never insert an object (e.g. wrench, screwdriver, pry bar, etc.) into valve cap openings. Doing so may damage valve, causing a leak to occur. Open valve slowly. If user experiences any difficulty operating cylinder valve discontinue use and contact supplier. Close container valve after each use and when empty, even if still connected to equipment. Never attempt to repair or modify container valves or safety relief devices. Damaged valves should be reported immediately to the supplier. Close valve after each use and when empty. Replace outlet caps or plugs and container caps as soon as container is disconnected from equipment. Do not subject containers to abnormal mechanical shock. Never attempt to lift a cylinder by its valve protection cap or guard. Do not use containers as rollers or supports or for any other purpose than to contain the gas as supplied. Never strike an arc on a compressed gas cylinder or make a cylinder a part of an electrical circuit. Keep container valve outlets clean and free from contaminates particularly oil and water. Do not smoke while handling product or cylinders. Never re-compress a gas or a gas mixture without first consulting the supplier. Never attempt to

transfer gases from one cylinder/container to another. Always use backflow protective device in piping. Purge air from system before introducing gas. Purge system with dry inert gas (e.g. helium or nitrogen) before gas is introduced and when system is placed out of service. Avoid suckback of water, acid and alkalis. Installation of a cross purge assembly between the cylinder and the regulator is recommended. When returning cylinder install valve outlet cap or plug leak tight. Never use direct flame or electrical heating devices to raise the pressure of a container. Containers should not be subjected to temperatures above 50°C (122°F). Never attempt to increase liquid withdrawal rate by pressurizing the container without first checking with the supplier. Never permit liquefied gas to become trapped in parts of the system as this may result in hydraulic rupture.

Storage

Use a back flow preventative device in the piping. Do not open valve until connected to equipment prepared for use. Use only with equipment of compatible materials of construction, rated for cylinder pressure. Close valve after each use and when empty. Read and follow the Safety Data Sheet (SDS) before use. Full containers should be stored so that oldest stock is used first. Containers should be stored in a purpose build compound which should be well ventilated, preferably in the open air. Observe all regulations and local requirements regarding storage of containers. Stored containers should be periodically checked for general condition and leakage. Local codes may have special requirements for toxic gas storage. Protect containers stored in the open against rusting and extremes of weather. Containers should not be stored in conditions likely to encourage corrosion. Containers should be stored in the vertical position and properly secured to prevent toppling. The container valves should be tightly closed and where appropriate valve outlets should be capped or plugged. Container valve guards or caps should be in place. Keep containers tightly closed in a cool, well-ventilated place. Full and empty cylinders should be segregated. Do not allow storage temperature to exceed 50°C (122°F). Return empty containers in a timely manner.

Technical measures/Precautions

Provide sufficient air exchange and/or exhaust in work rooms. Containers should be segregated in the storage area according to the various categories (e.g. flammable, toxic, etc.) and in accordance whit local regulations.

Storage Temperature : < 72 °F (< 22 °C)

8. EXPOSURE CONTROLS / PERSONAL PROTECTION

Engineering measures

Handle product only in closed system or provide appropriate exhaust ventilation at machinery.
Provide natural or explosion-proof ventilation adequate to ensure concentrations are kept below exposure limits.
Provide readily accessible eye wash stations and safety showers.

Personal protective equipment

Respiratory protection : Keep self contained breathing apparatus readily available for emergency use. Use self-contained breathing apparatus or positive pressure air line with mask and escape pack in areas where concentration is unknown or above the exposure limits. Users of breathing apparatus must be trained.

Hand protection : Acid resistant gloves.
Sturdy work gloves are recommended for handling cylinders.
Chemical-resistant, impervious gloves complying with an approved standard should be worn at all times when handling chemical products if a risk assessment indicates this is necessary.

Eye protection : Safety glasses recommended when handling cylinders.
A full faceshield should be worn in addition to safety glasses when connecting, disconnecting or opening cylinders.

Skin and body protection : Acid resistant gloves (e.g. butyl rubber, neoprene, polyethylene) and splash suit when connecting, disconnecting or opening cylinders.
Cold temperatures may cause embrittlement of protective material resulting in breakage and exposure.
Contact with cold evaporating liquid on gloves or suit may cause cryogenic burns or frostbite.
Safety shoes are recommended when handling cylinders.
Encapsulated chemical protective suit in emergency situations.

Special instructions for protection and hygiene : Ensure adequate ventilation, especially in confined areas. Provide good ventilation and/or local exhaust to prevent accumulation of concentrations above exposure limits.

Exposure limit(s)

Hydrogen Chloride	Ceiling Limit Value: ACGIH	2 ppm	-
Hydrogen Chloride	Ceiling Limit Value and Time Period (if specified): NIOSH	5 ppm	7 mg/m3
Hydrogen Chloride	Ceiling Limit Value: OSHA Z1	5 ppm	7 mg/m3
Hydrogen Chloride	Ceiling Limit Value: OSHA Z1A	5 ppm	7 mg/m3
Hydrogen Chloride	Ceiling Limit Value: US CA OEL	5 ppm	7 mg/m3
Hydrogen Chloride	Ceiling Limit Value: TN OEL	5 ppm	7 mg/m3

9. PHYSICAL AND CHEMICAL PROPERTIES

Appearance : Liquefied gas. Gives off white fumes in moist air

Odor : Pungent.

Odor threshold : No data available.

pH : Not applicable.

Melting point/range : -174 °F (-114.2 °C)

Boiling point/range : -121 °F (-84.9 °C)

Flash point : Not applicable.

Evaporation rate : Not applicable.

Flammability (solid, gas) : Refer to product classification in Section 2

Upper/lower : No data available.

explosion/flammability limit

Vapor pressure	:	617.84 psia (42.60 bara) at 68 °F (20 °C)
Water solubility	:	Hydrolyses.
Relative vapor density	:	1.259 (air = 1)
Relative density	:	1.2 (water = 1)
Partition coefficient (n-octanol/water)	:	Not applicable.
Auto-ignition temperature	:	No data available.
Decomposition temperature	:	No data available.
Viscosity	:	Not applicable.
Molecular Weight	:	36.46 g/mol
Density	:	0.094 lb/ft3 (0.0015 g/cm3) at 70 °F (21 °C) Note: (as vapor)
Specific Volume	:	10.55 ft3/lb (0.6586 m3/kg) at 70 °F (21 °C)

10. STABILITY AND REACTIVITY

Chemical Stability	:	Stable under normal conditions.
Conditions to avoid	:	No data available.
Materials to avoid	:	Water. Aluminium. Brass. Incompatible with bases. Zinc.
Hazardous decomposition products	:	Gives off hydrogen by reaction with metals.
Possibility of hazardous Reactions/Reactivity	:	No data available.

11. TOXICOLOGICAL INFORMATION

11.1. Information on toxicological effects

Likely routes of exposure

Effects on Eye	:	Irritating to eyes. Causes severe eye burns. May cause permanent eye injury.

Effects on Skin	:	Contact with liquid may cause cold burns/frostbite. Causes skin irritation. Causes skin burns.
Inhalation Effects	:	May be fatal if inhaled. Irritating to respiratory system. Can cause severe lung damage. May be fatal if inhaled. Delayed adverse effects possible. Prolonged exposure to small concentrations may result in pulmonary edema. Delayed fatal pulmonary edema possible.
Ingestion Effects	:	No data available.
Symptoms	:	Irritating to eyes and respiratory system. Cough. Acute or chronic respiratory conditions.

Acute toxicity

Acute Oral Toxicity	:	No data is available on the product itself.
Inhalation	:	LC50 (1 h) : 2810 ppm Species : Rat.
Acute Dermal Toxicity	:	No data is available on the product itself.
Skin corrosion/irritation	:	No data available.
Serious eye damage/eye irritation	:	No data available.
Sensitization.	:	No data available.

Chronic toxicity or effects from long term exposures

Carcinogenicity	:	No data available.
Reproductive toxicity	:	No data is available on the product itself.
Germ cell mutagenicity	:	No data is available on the product itself.
Specific target organ systemic toxicity (single exposure)	:	No data available.
Specific target organ systemic toxicity (repeated exposure)	:	No data available.
Aspiration hazard	:	No data available.

Delayed and Immediate Effects and Chronic Effects from Short and Long Term Exposure

Acute or chronic respiratory conditions.
Asthma.

Pregnant rats exposed for one hour to 300 ppm hydrochloric acid had a five-fold higher incidence of fetal death than control rats. In addition, the surviving rat pups showed disturbances in kidney function., Exposure may cause spasm of the larynx or bronchi., This product is toxic, causing severe irritation of the upper respiratory tract upon inhalation, and irritation of the eyes and theskin on contact.

12. ECOLOGICAL INFORMATION

Ecotoxicity effects

Aquatic toxicity : May cause pH changes in aqueous ecological systems.

Toxicity to other organisms : No data available.

Persistence and degradability

Biodegradability : No data is available on the product itself.

Mobility : No data available.

Bioaccumulation : Refer to Section 9 "Partition Coefficient (n-octanol/water)".

Bioaccumulation - Components
Hydrogen Chloride Negligible bioaccumulation potential.

13. DISPOSAL CONSIDERATIONS

Waste from residues / unused products : In accordance with local and national regulations. Return unused product in original cylinder to supplier. Contact supplier if guidance is required. Must not be discharged to atmosphere.

Contaminated packaging : Return cylinder to supplier.

14. TRANSPORT INFORMATION

DOT

UN/ID No. : UN1050
Proper shipping name : Hydrogen chloride, anhydrous
Class or Division : 2.3
Label(s) : 2.3 (8)
PIH Zone : C
RQ Substance : Yes
Marine Pollutant : No

* NOTE: This product contains a USDOT Hazardous Substance and will meet the Reportable Quantity definition when shipped to, from, or within the United States, in the amount specified in 49CFR 172.101

Appendix A.

IATA

Transport Forbidden

IMDG

UN/ID No.	:	UN1050
Proper shipping name	:	HYDROGEN CHLORIDE, ANHYDROUS
Class or Division	:	2.3
Label(s)	:	2.3 (8)
RQ Substance	:	Yes
Marine Pollutant	:	No

* NOTE: This product contains a USDOT Hazardous Substance and will meet the Reportable Quantity definition when shipped to, from, or within the United States, in the amount specified in 49CFR 172.101 Appendix A.

TDG

UN/ID No.	:	UN1050
Proper shipping name	:	HYDROGEN CHLORIDE, ANHYDROUS
Class or Division	:	2.3
Label(s)	:	2.3 (8)
RQ Substance	:	Yes
Marine Pollutant	:	No

* NOTE: This product contains a USDOT Hazardous Substance and will meet the Reportable Quantity definition when shipped to, from, or within the United States, in the amount specified in 49CFR 172.101 Appendix A.

Further Information

Avoid transport on vehicles where the load space is not separated from the driver's compartment. Ensure vehicle driver is aware of the potential hazards of the load and knows what to do in the event of an accident or an emergency. The transportation information is not intended to convey all specific regulatory data relating to this material. For complete transportation information, contact customer service.

15. REGULATORY INFORMATION

Toxic Substance Control Act (TSCA) 12(b) Component(s):

None.

Country	Regulatory list	Notification
USA	TSCA	Included on Inventory.
EU	EINECS	Included on Inventory.
Canada	DSL	Included on Inventory.
Australia	AICS	Included on Inventory.
Japan	ENCS	Included on Inventory.
South Korea	ECL	Included on Inventory.
China	SEPA	Included on Inventory.
Philippines	PICCS	Included on Inventory.

EPA SARA Title III Section 312 (40 CFR 370) Hazard Classification
Acute Health Hazard

Sudden Release of Pressure Hazard.

EPA SARA Title III Section 313 (40 CFR 372) Component(s) above 'de minimus' level
Hydrogen Chloride

US. California Safe Drinking Water & Toxic Enforcement Act (Proposition 65)
This product does not contain any chemicals known to State of California to cause cancer, birth defects or any other harm.

16. OTHER INFORMATION

NFPA Rating

Health : 3
Fire : 0
Instability : 1

HMIS Rating

Health : 3
Flammability : 0
Physical hazard : 3

Prepared by : Air Products and Chemicals, Inc. Global EH&S Department

Telephone : 1-610-481-4911 Corporate
1-800-345-3148 Chemicals Cust Serv
1-800-752-1597 Gases/Electronics Cust Serv

Preparation Date : 03/18/2017

For additional information, please visit our Product Stewardship web site at
http://www.airproducts.com/productstewardship/

Praxair Material Safety Data Sheet

Product:	Compressed gas, flammable n.o.s. (1-499 ppm phosphine, balance hydrogen)	SDS No. P-19-6467 April 2013

1. Chemical Product and Company Identification

Product Name: Compressed gas, flammable n.o.s. (1-499 ppm phosphine, balance hydrogen)	**Trade Names:** Not applicable.
Chemical Name: Mixtures of phosphine and hydrogen	**Synonyms:** Not applicable.
Chemical Family: Not applicable.	**Product Grades:** None assigned.
Emergency Telephone Numbers:*	**Company Name:**
Onsite emergencies: 1-800-645-4633	Praxair, Inc. 39 Old Ridgebury Road Danbury, CT 06810-5113
CHEMTREC: 1-800-424-9300	

**Call emergency numbers 24 hours a day only for spills, leaks, fire, exposure, or accidents involving this product. For routine information, contact your supplier, Praxair sales representative, or call 1-800-PRAXAIR (1-800-772-9247).*

2. Hazard Identification

EMERGENCY OVERVIEW

DANGER! Flammable high-pressure gas.

May be harmful if inhaled.

May cause rapid suffocation.

May cause dizziness and drowsiness.

Can form explosive mixtures with air.

Can ignite on contact with air.

Burns with invisible flame.

Self-contained breathing apparatus and protective clothing must be worn by rescue workers.

Under ambient conditions, this is a colorless, odorless gas.

OSHA REGULATORY STATUS: The components of this mixture are considered hazardous by the OSHA Hazard Communications Standard (29 CFR 1910.1200).

← A vertical line in the left margin indicates revised or new material.

Copyright © 2013, Praxair Technology, Inc. All rights reserved.

POTENTIAL HEALTH EFFECTS:

Effects of a Single (Acute) Overexposure

Inhalation. Asphyxiant. Effects are due to lack of oxygen. Moderate concentrations may cause headache, drowsiness, dizziness, excitation, excess salivation, vomiting, and unconsciousness. Lack of oxygen can kill.

Skin Contact: No harm expected.

Swallowing: This product is a gas at normal temperature and pressure.

Eye Contact: May cause eye irritation.

Effects of Repeated (Chronic) Overexposure: No harm expected.

Other Effects of Overexposure: Asphyxiant. Lack of oxygen can kill.

Medical Conditions Aggravated by Overexposure: Inhalation may aggravate asthma and inflammatory or fibrotic pulmonary disease.

CARCINOGENICITY: The components of this mixture are not listed by NTP, OSHA, or IARC.

POTENTIAL ENVIRONMENTAL EFFECTS: None known. For further information, see section 12, Ecological Information.

3. Composition/Information on Ingredients

See section 16 for important information about mixtures.

COMPONENT	CAS NUMBER	CONCENTRATION
Phosphine	7803-51-2	1-499 ppm
Hydrogen	1333-74-0	Balance

4. First Aid Measures

INHALATION: Remove to fresh air. If not breathing, give artificial respiration. If breathing is difficult, qualified personnel may give oxygen. Call a physician.

SKIN CONTACT: An unlikely route of exposure. This product is a gas at normal temperature and pressure.

SWALLOWING: An unlikely route of exposure. This product is a gas at normal temperature and pressure.

EYE CONTACT: Immediately flush eyes thoroughly with water for at least 15 minutes. Hold the eyelids open and away from the eyeballs to ensure that all surfaces are thoroughly flushed. Immediately see a physician, preferably an ophthalmologist.

NOTES TO PHYSICIAN: *There is no specific antidote. Treatment of suspected overexposure should be directed at the control of symptoms and the clinical condition of the patient.*

Contact the Poison Control Center in your area for additional information on patient management and follow-up.

5. Fire Fighting Measures

FLAMMABLE PROPERTIES: Flammable gas. Flame is nearly invisible. Escaping gas may ignite spontaneously. Hydrogen has a low ignition energy. Fireball forms if gas cloud ignites immediately after release. Forms explosive mixtures with air and oxidizing agents.

SUITABLE EXTINGUISHING MEDIA: CO_2, dry chemicals, water spray, or fog.

PRODUCTS OF COMBUSTION: Water (H_2O).

PROTECTION OF FIREFIGHTERS: DANGER! Flammable high-pressure gas. (See section 2.) Evacuate all personnel from danger area. Do not approach area without self-contained breathing apparatus and protective clothing. Immediately spray cylinders with water from maximum distance until cool, taking care not to extinguish flames. Solid streams of water may be ineffective. Remove ignition sources if without risk. If flames are accidentally extinguished, explosive reignition may occur. Reduce toxic vapors with water spray or fog. Stop flow of gas if without risk, while continuing cooling water spray. Remove all containers from area of fire if without risk. Allow fire to burn out. On-site fire brigades must comply with OSHA 29 CFR 1910.156 and applicable standards under 29 CFR 1910 Subpart L—Fire Protection.

Specific Physical and Health Hazards: Gas may form explosive mixtures with air and oxidizing agents. Heat of fire can build pressure in cylinder and cause it to rupture. No part of cylinder should be subjected to a temperature higher than 125°F (52°C). Cylinders containing this mixture are equipped with a pressure relief device. (Exceptions may exist where authorized by DOT.) If leaking or spilled hydrogen and phosphine catches fire, do not extinguish flames. Flammable and toxic vapors may spread from the leak and could explode if reignited by sparks or flames. Explosive atmospheres may linger. Before entering area, especially confined areas, check with an appropriate device. To protect persons from cylinder fragments and toxic fumes should a rupture occur, evacuate the area if the fire cannot be brought under immediate control.

Protective Equipment and Precautions for Firefighters: Firefighters should wear self-contained breathing apparatus and full fire-fighting turnout gear.

6. Accidental Release Measures

STEPS TO BE TAKEN IF MATERIAL IS RELEASED OR SPILLED:

DANGER! Flammable high-pressure gas.

Personnel Safety Precautions: Immediately evacuate all personnel from danger area. Do not approach area without self-contained breathing apparatus and protective clothing. Gas forms explosive mixtures with air. (See section 5.) Before entering area, especially a confined area, check atmosphere with an appropriate device. Remove all sources of ignition if without risk. Reduce vapors with fog or fine water spray. Shut off flow if without risk. Ventilate area or move cylinder to a well-ventilated area. Prevent runoff from contaminating surrounding environment. Flammable vapors may spread from spill.

Environmental Protection: Prevent waste from contaminating the surrounding environment. Discard any product, residue, disposable container, or liner in an environmentally acceptable manner, in full compliance with federal, state, and local regulations. If necessary, call your local supplier for assistance.

7. Handling and Storage

PRECAUTIONS TO BE TAKEN IN HANDLING: ***Keep away from heat, sparks, and open flame.*** Use only spark-proof tools and explosion-proof equipment. ***Protect cylinders from damage.*** Use a suitable hand truck to move cylinders; do not drag, roll, slide, or drop. ***Hydrogen is the lightest known gas.*** It may leak out of systems that are air-tight for other gases and may collect in poorly ventilated upper reaches of buildings. Leak check system with soapy water; never use a flame. ***All piped hydrogen systems and associated equipment must be grounded.*** Electrical equipment must be non-sparking or explosion-proof. ***Do not crack or open hydrogen cylinder valves unless connected to utilization equipment;*** escaping gas may ignite spontaneously. Open valve slowly. If valve is hard to open, discontinue use and contact your supplier. Close cylinder valve after each use; keep closed even when empty. ***Never attempt to lift a cylinder by its cap;*** the cap is intended solely to protect the valve. Never insert an object (e.g., wrench, screwdriver, pry bar) into cap openings; doing so may damage the valve and cause a leak. Use an adjustable strap wrench to remove over-tight or rusted caps. For other precautions in using hydrogen, see section 16.

PRECAUTIONS TO BE TAKEN IN STORAGE: Store and use with adequate ventilation. Store only where temperature will not exceed 125°F (52°C). Post “No Smoking or Open Flames” signs in storage and use areas. There must be no sources of ignition. Separate packages and protect against potential fire and/or explosion damage following appropriate codes and requirements (e.g., NFPA 30, NFPA 55, NFPA 70, and/or NFPA 221 in the U.S.) or according to requirements determined by the Authority Having Jurisdiction (AHJ). Always secure cylinders upright to keep them from falling or being knocked over. Install valve protection cap, if provided, firmly in place by hand when the cylinder is not in use. Store full and empty cylinders separately. Use a first-in, first-out inventory system to prevent storing full cylinders for long periods. For other precautions in using this mixture, see section 16.

RECOMMENDED PUBLICATIONS:

For further information on storage, handling, and use see Praxair publication P-14-153, *Guidelines for Handling Gas Cylinders and Containers*. Obtain from your local supplier. For further information specific to hydrogen, see NFPA 50A, *Standard for Gaseous Hydrogen Systems at Consumer Sites*, published by the National Fire Protection Association, 1 Batterymarch Park, PO Box 9101, Quincy, MA 02269-9101; 1-800-344-3555; www.nfpa.org.

8. Exposure Controls/Personal Protection

COMPONENT	OSHA PEL	ACGIH TLV (2012)
Phosphine	0.3 ppm TWA	1 ppm–15-minute STEL; 0.3 ppm TWA
Hydrogen	Not established.	Simple asphyxiant

IDLH = Phosphine: 50 ppm

ENGINEERING CONTROLS:

Local Exhaust. An explosion-proof local exhaust system is acceptable. See SPECIAL.

Mechanical (General). Inadequate; see Special.

Special. Use only in a closed system.

Other. See Special.

PERSONAL PROTECTIVE EQUIPMENT:
Skin Protection. Wear work gloves and metatarsal shoes when handling cylinders. Select in accordance with OSHA 29 CFR 1910.132, 1910.136, and 1910.138.

Eye/Face Protection. Wear safety glasses with side shields or safety goggles when handling cylinders. Select eye protection in accordance with OSHA 29 CFR 1910.133.

Respiratory Protection. A respiratory protection program that meets OSHA 29 CFR 1910.134, ANSI Z88.2, or MSHA 30 CFR 72.710 (where applicable) requirements must be followed whenever workplace conditions warrant respirator use. Use an air-supplied or air-purifying cartridge if the action level is exceeded. Ensure that the respirator has the appropriate protection factor for the exposure level. If cartridge type respirators are used, the cartridge must be appropriate for the chemical exposure (e.g., an organic vapor cartridge). For emergencies or instances with unknown exposure levels, use a self-contained breathing apparatus.

9. Physical and Chemical Properties

APPEARANCE:	Colorless gas
ODOR:	Decaying fish
ODOR THRESHOLD:	Not available.
PHYSICAL STATE:	Gas at normal temperature and pressure
pH:	Not applicable.
MELTING POINT at 1 atm**:**	Not available.
BOILING POINT at 1 atm**:**	Not available.
FLASH POINT (test method)**:**	Not available.
EVAPORATION RATE (Butyl Acetate = 1)**:**	Not applicable.
FLAMMABILITY:	Flammable.

9. Physical and Chemical Properties

FLAMMABLE LIMITS IN AIR, % by volume: (based on hydrogen)	**LOWER:**	4.0%	**UPPER:**	75.0%
VAPOR PRESSURE at 68°F (20°C):	Not available.			
VAPOR DENSITY at 70°F (21.1°C) and 1 atm:	Not available.			
SPECIFIC GRAVITY (H_2O = 1) at 19.4°F (-7°C):	Not available.			
SPECIFIC GRAVITY (Air = 1) at 70°F (21.1°C) and 1 atm:	Not available.			
SOLUBILITY IN WATER, % by wt:	Negligible			
PARTITION COEFFICIENT: n-octanol/water:	Not available.			
AUTOIGNITION TEMPERATURE:	1051°F (566°C) (based on hydrogen)			
DECOMPOSITION TEMPERATURE:	Not available.			
PERCENT VOLATILES BY VOLUME:	100			
MOLECULAR WEIGHT:	Not applicable.			
MOLECULAR FORMULA:	Mixtures of PH_3 and H_2			

10. Stability and Reactivity

CHEMICAL STABILITY: ☐ Unstable ☒ Stable

CONDITIONS TO AVOID: High temperatures; phosphine decomposes at temperatures in excess of 689°F (365°C)

INCOMPATIBLE MATERIALS: Oxidizing agents, especially oxygen and halogens, lithium, acids, and copper.

HAZARDOUS DECOMPOSITION PRODUCTS: Thermal decomposition or burning may product phosphorus and phosphorus oxides.

POSSIBILITY OF HAZARDOUS REACTIONS: May Occur ☐ Will Not Occur

Thermal decomposition or burning releases poisonous substances.

11. Toxicological Information

ACUTE DOSE EFFECTS: Phosphine: 20 ppm, 1 hr, rat. Hydrogen is a simple asphyxiant.

STUDY RESULTS: None known about this mixture.

12. Ecological Information

ECOTOXICITY: No known effects.

OTHER ADVERSE EFFECTS: No adverse ecological effects expected. The components of this mixture do not contain any Class I or Class II ozone-depleting chemicals.

13. Disposal Considerations

WASTE DISPOSAL METHOD: Do not attempt to dispose of residual or unused quantities. Return cylinder to supplier.

14. Transport Information

DOT/IMO SHIPPING NAME: Compressed gas, flammable n.o.s. (1-499 ppm phosphine, balance hydrogen)

HAZARD CLASS: 2.1	PACKING GROUP/Zone: NA*	IDENTIFICATION NUMBER: UN1954	PRODUCT RQ: None

SHIPPING LABEL(s): FLAMMABLE GAS

PLACARD (when required): FLAMMABLE GAS

**NA = Not applicable.*

SPECIAL SHIPPING INFORMATION: Cylinders should be transported in a secure position, in a well-ventilated vehicle. Cylinders transported in an enclosed, non-ventilated compartment of a vehicle can present serious safety hazards.

Shipment of compressed gas cylinders that have been filled without the owner's consent is a violation of federal law [49 CFR 173.301(e)].

MARINE POLLUTANTS: The components of this mixture are not listed as marine pollutants by DOT.

15. Regulatory Information

The following selected regulatory requirements may apply to this product. Not all such requirements are identified. Users of this product are solely responsible for compliance with all applicable federal, state, and local regulations.

U.S. FEDERAL REGULATIONS:

EPA (ENVIRONMENTAL PROTECTION AGENCY)

CERCLA: COMPREHENSIVE ENVIRONMENTAL RESPONSE, COMPENSATION, AND LIABILITY ACT OF 1980 (40 CFR Parts 117 and 302):

Reportable Quantity (RQ): Phosphine: 100 lb (45.4 kg) Hydrogen: None

SARA: SUPERFUND AMENDMENT AND REAUTHORIZATION ACT:

SECTIONS 302/304: Require emergency planning based on Threshold Planning Quantity (TPQ) and release reporting based on Reportable Quantities (RQ) of Extremely Hazardous Substances (EHS) (40 CFR Part 355):

TPQ: Phosphine: 500 lb (226.8 kg) Hydrogen: None
EHS RQ (40 CFR 355): Phosphine: 100 lb (45.4 kg) Hydrogen: None

SECTIONS 311/312: Require submission of MSDSs and reporting of chemical inventories with identification of EPA hazard categories. The hazard categories for this product are as follows:

IMMEDIATE: No
DELAYED: No
PRESSURE: Yes
REACTIVITY: No
FIRE: Yes

SECTION 313: Requires submission of annual reports of release of toxic chemicals that appear in 40 CFR Part 372.

Phosphine and mixtures containing it are subject to the reporting requirements of Section 313 of Title III of the Superfund Amendments and Reauthorization Act of 1986 (SARA) and 40 CFR 372. Hydrogen is not subject to reporting under Section 313.

40 CFR 68: RISK MANAGEMENT PROGRAM FOR CHEMICAL ACCIDENTAL RELEASE PREVENTION: Requires development and implementation of risk management programs at facilities that manufacture, use, store, or otherwise handle regulated substances in quantities that exceed specified thresholds.

Phosphine is listed as a regulated substance in quantities of 5000 lb (2268 kg) or greater. Hydrogen is listed as a regulated substance in quantities of 10,000 lb (4536 kg) or greater.

TSCA: TOXIC SUBSTANCES CONTROL ACT: The components of this mixture are listed on the TSCA inventory.

OSHA: OCCUPATIONAL SAFETY AND HEALTH ADMINISTRATION:

29 CFR 1910.119: PROCESS SAFETY MANAGEMENT OF HIGHLY HAZARDOUS CHEMICALS: Requires facilities to develop a process safety management program based on Threshold Quantities (TQ) of highly hazardous chemicals.

Phosphine is listed in Appendix A as a highly hazardous chemical in quantities of 100 lb (45.4 kg) or greater. Hydrogen is not listed in Appendix A as a highly hazardous chemical. However, any process that involves a flammable gas on site in one location in quantities of 10,000 lb (4536 kg) or greater is covered under this regulation unless the gas is used as a fuel.

STATE REGULATIONS:

CALIFORNIA: None of the components of this mixture are listed by California under the SAFE DRINKING WATER AND TOXIC ENFORCEMENT ACT OF 1986 (Proposition 65).

PENNSYLVANIA: The components of this mixture are subject to the PENNSYLVANIA WORKER AND COMMUNITY RIGHT-TO-KNOW ACT (35 P.S. Sections 7301-7320).

16. Other Information

Read and understand all labels and instructions supplied with all containers of this product.

OTHER HAZARDOUS CONDITIONS OF HANDLING, STORAGE, AND USE: ***High-pressure gas.*** Use piping and equipment adequately designed to withstand pressures to be encountered. Use a backflow prevention device in any piping. Store and use with adequate ventilation at all times. Use only in a closed system constructed of corrosion-resistant materials and scrupulously kept dry. Purge system with a dry, inert gas before and after use. Prevent reverse flow. Reverse flow into cylinder may cause rupture. Use a check valve or other protective device in any line or piping from the cylinder. Never work on a pressurized system. If there is a leak, close the cylinder valve. Blow the system down in an environmentally safe manner in compliance with all federal, state, and local laws, and then repair the leak. Follow safe practices when returning cylinder to supplier. Ensure that the valve is closed, and then install valve outlet cap or plug, leak-tight. Never place a compressed gas cylinder where it may become part of an electrical circuit.

Mixtures. When you mix two or more chemicals, you can create additional, unexpected hazards. Obtain and evaluate the safety information for each component before you produce the mixture. Consult an industrial hygienist or other trained person when you evaluate the end product. Chemicals have properties that can cause serious injury or death.

HAZARD RATING SYSTEMS:

NFPA RATINGS:		**HMIS RATINGS:**	
HEALTH	= 0	HEALTH	= 1
FLAMMABILITY	= 4	FLAMMABILITY	= 4
INSTABILITY	= 0	PHYSICAL HAZARD	= 3
SPECIAL	= None		

STANDARD VALVE CONNECTIONS FOR U.S. AND CANADA:

THREADED:	CGA-350
PIN-INDEXED YOKE:	Not applicable.
ULTRA-HIGH-INTEGRITY CONNECTION:	Not applicable.

Use the proper CGA connections. **DO NOT USE ADAPTERS.** Additional limited-standard connections may apply. See CGA pamphlets V-1 and V-7 listed below.

Ask your supplier about free Praxair safety literature as referred to in this MSDS and on the label for this product. Further information can be found in the following materials published by the Compressed Gas Association, Inc. (CGA), www.cganet.com.

AV-1	*Safe Handling and Storage of Compressed Gases*
P-1	*Safe Handling of Compressed Gases in Containers*
SB-2	*Oxygen-Deficient Atmospheres*
V-1	*Compressed Gas Cylinder Valve Inlet and Outlet Connections*
V-7	*Standard Method for Determining Cylinder Valve Outlet Connections for Industrial Gas Mixtures*
—	*Handbook of Compressed Gases*

Last revised 3 Apr 2013.

Product:	Compressed gas, flammable n.o.s. (1-499 ppm phosphine, balance hydrogen)	SDS No. P-19-6467 April 2013

Praxair asks users of this product to study this MSDS and become aware of product hazards and safety information. To promote safe use of this product, a user should (1) notify employees, agents, and contractors of the information in this MSDS and of any other known product hazards and safety information, (2) furnish this information to each purchaser of the product, and (3) ask each purchaser to notify its employees and customers of the product hazards and safety information.

The opinions expressed herein are those of qualified experts within Praxair, Inc. We believe that the information contained herein is current as of the date of this Material Safety Data Sheet. Since the use of this information and the conditions of use of the product are not within the control of Praxair, Inc., it is the user's obligation to determine the conditions of safe use of the product.

Praxair MSDSs are furnished on sale or delivery by Praxair or the independent distributors and suppliers who package and sell our products. To obtain current MSDSs for these products, contact your Praxair sales representative or local distributor or supplier. If you have questions regarding Praxair MSDSs, would like the form number and date of the latest MSDS, or would like the names of the Praxair suppliers in your area, phone or write the Praxair Call Center (**Phone:** 1-800-PRAXAIR; **Address:** Praxair Call Center, Praxair, Inc., PO Box 44, Tonawanda, NY 14151-0044).

Praxair, *Making our planet more productive*, and the *Flowing Airstream* design are trademarks or registered trademarks of Praxair Technology, Inc. in the United States and/or other countries.

Praxair, Inc.
39 Old Ridgebury Road
Danbury, CT 06810-5113

MATHESON
ask. . .The Gas Professionals™

Safety Data Sheet

Material Name: 50-200 ppmv Arsine in Hydrogen **SDS ID: 00244449**

Section 1 - PRODUCT AND COMPANY IDENTIFICATION

Material Name
50-200 ppmv Arsine in Hydrogen
Trade Names
arsine gas mixture
Product Description
Classification determined in accordance with Compressed Gas Association standards.
Product Use
Industrial and Specialty Gas Applications.
Restrictions on Use
None known.
Details of the supplier of the safety data sheet
MATHESON TRI-GAS, INC.
150 Allen Road, Suite 302
Basking Ridge, NJ 07920
General Information: 1-800-416-2505
Emergency #: 1-800-424-9300 (CHEMTREC)
Outside the US: 703-527-3887 (Call collect)

Section 2 - HAZARDS IDENTIFICATION

Classification in accordance with paragraph (d) of 29 CFR 1910.1200.
Flammable Gases - Category 1
Gases Under Pressure - Compressed gas
Simple Asphyxiant.
GHS Label Elements
Symbol(s)

Signal Word
Danger
Hazard Statement(s)
Extremely flammable gas.
Contains gas under pressure; may explode if heated.
May displace oxygen and cause rapid suffocation.
Precautionary Statement(s)
Prevention
Keep away from heat/sparks/open flame/hot surfaces - No smoking.
Response
Leaking gas fire: Do not extinguish, unless leak can be stopped safely.
Eliminate all ignition sources if safe to do so.
Storage
Protect from sunlight. Store in a well-ventilated place.
Disposal

Dispose of contents/container in accordance with local/regional/national/international regulations.

Other Hazards

Rapid release of compressed gas may cause frostbite.

Section 3 - COMPOSITION / INFORMATION ON INGREDIENTS

CAS	Component Name	Percent
1333-74-0	Hydrogen	>99
7784-42-1	Arsine	0.005-0.02

Section 4 - FIRST AID MEASURES

Inhalation

Remove person to fresh air and keep comfortable for breathing. Give artificial respiration if not breathing. If breathing is difficult, oxygen should be administered by qualified personnel. Get immediate medical attention.

Skin

If frostbite or freezing occur, immediately flush with plenty of lukewarm water (105-115°F; 41-46°C). DO NOT USE HOT WATER. If warm water is not available, gently wrap affected parts in blankets. Remove contaminated clothing, jewelry, and shoes immediately. In case of frostbite, wash with plenty of water; do not remove clothing. Get immediate medical attention.

Eyes

Rinse cautiously with water for several minutes. Remove contact lenses, if present and easy to do. Continue rinsing. Then get immediate medical attention.

Ingestion

If swallowed, get medical attention.

Most Important Symptoms/Effects

Acute

Frostbite, suffocation

Delayed

no information on significant adverse effects.

Note to Physicians

For inhalation, consider oxygen.

Section 5 - FIRE FIGHTING MEASURES

Extinguishing Media

Suitable Extinguishing Media

Small fires: regular dry chemical, carbon dioxide. Large fires: Use water spray, fog or regular foam.

Unsuitable Extinguishing Media

Do not direct water at source of leak or safety devices; icing may occur.

Special Hazards Arising from the Chemical

Severe fire hazard. Severe explosion hazard. Gas/air mixtures are explosive. Containers may rupture or explode if exposed to heat. Electrostatic discharges may be generated by flow or agitation resulting in ignition or explosion. Hydrogen burns with an almost invisible flame.

Hazardous Combustion Products

Hydrogen, oxides of arsenic

Fire Fighting Measures

Move container from fire area if it can be done without risk. Cool containers with water spray until well after the fire is out. Stay away from the ends of tanks. For fires in cargo or storage area: Cool containers with water from unmanned hose holder or monitor nozzles until well after fire is out. If this is impossible then take the following

precautions: Keep unnecessary people away, isolate hazard area and deny entry. Let the fire burn. Withdraw immediately in case of rising sound from venting safety device or any discoloration of tanks due to fire. For tank, rail car or tank truck, evacuation radius: 1600 meters (1 mile). Do not attempt to extinguish fire unless flow of material can be stopped first. Flood with fine water spray. Cool containers with water. Apply water from a protected location or from a safe distance. Avoid inhalation of material or combustion by-products. Stay upwind and keep out of low areas.

Special Protective Equipment and Precautions for Firefighters

Wear full protective fire fighting gear including self contained breathing apparatus (SCBA) for protection against possible exposure.

Section 6 - ACCIDENTAL RELEASE MEASURES

Personal Precautions, Protective Equipment and Emergency Procedures

Wear personal protective clothing and equipment, see Section 8.

Methods and Materials for Containment and Cleaning Up

Leaking gas fire: Do not extinguish, unless leak can be stopped safely. Remove all sources of ignition. Do not touch or walk through spilled material. Stop leak if possible without personal risk. Reduce vapors with water spray. Keep unnecessary people away, isolate hazard area and deny entry. Ventilate closed spaces before entering. Damaged cylinders should be handled only by specialists.

Environmental Precautions

Avoid release to the environment.

Section 7 - HANDLING AND STORAGE

Precautions for Safe Handling

Keep away from heat, sparks, open flame, and hot surfaces - No smoking. Avoid breathing dust/fume/gas/mist/vapors/spray. Use only outdoors or in a well-ventilated area.

Conditions for Safe Storage, Including any Incompatibilities

Protect from sunlight. Store in a well-ventilated place.

Store and handle in accordance with all current regulations and standards. Store in a tightly closed container. Compressed gases can present significant safety hazards. Protect from physical damage. Store below 52 C. Cylinders should be stored upright (with valve protection cap in place). Store cylinders away from heavily trafficked areas and emergency exits. For additional and specific safe practices consult the following Compressed Gas Association (CGA) publications: P-1 "Safe Handling of Compressed Gases in Cylinders", AV-1 "Safe Handling and Storage of Compressed Gases", and "Compressed Gas Handbook". Keep separated from incompatible substances.

Incompatible Materials

combustible materials, halo carbons, halogens, metal oxides, metal salts, metals, oxidizing materials

Section 8 - EXPOSURE CONTROLS / PERSONAL PROTECTION

Component Exposure Limits

Hydrogen	**1333-74-0**
ACGIH:	(See Appendix F: Minimal Oxygen Content, explosion hazard)
Arsine	**7784-42-1**
ACGIH:	0.005 ppm TWA
NIOSH:	0.002 mg/m3 Ceiling 15 min
	3 ppm IDLH

OSHA (US):	0.05 ppm TWA ; 0.2 mg/m3 TWA
Mexico:	0.05 ppm TWA VLE-PPT ; 0.2 mg/m3 TWA VLE-PPT

ACGIH - Threshold Limit Values - Biological Exposure Indices (BEI)
There are no biological limit values for any of this product's components.
Engineering Controls
Ventilation equipment should be explosion-resistant if explosive concentrations of material are present. Provide local exhaust or process enclosure ventilation system. Ensure compliance with applicable exposure limits.
Individual Protection Measures, such as Personal Protective Equipment
Eye/face protection
For the gas: Eye protection not required, but recommended. For the liquid: Wear splash resistant safety goggles. Contact lenses should not be worn. Provide an emergency eye wash fountain and quick drench shower in the immediate work area.
Skin Protection
For the gas: Protective clothing is not required. For the liquid: Wear appropriate protective, cold insulating clothing.
Respiratory Protection
Under conditions of frequent use or heavy exposure, respiratory protection may be needed. Respiratory protection is ranked in order from minimum to maximum. Consider warning properties before use. For Unknown Concentrations or Immediately Dangerous to Life or Health -. Any supplied-air respirator with a full facepiece that is operated in a pressure-demand or other positive-pressure mode in combination with an auxiliary self-contained breathing apparatus operated in pressure-demand or other positive-pressure mode. Any self-contained breathing apparatus that has a full facepiece and is operated in a pressure-demand or other positive-pressure mode.
Glove Recommendations
For the gas: Wear appropriate chemical resistant gloves. For the liquid: Wear insulated gloves.

Section 9 - PHYSICAL AND CHEMICAL PROPERTIES

Appearance	colorless gas	**Physical State**	gas
Odor	Not available	**Color**	colorless
Odor Threshold	Not available	**pH**	Not available
Melting Point	-259.2 °C (-435 °F Hydrogen)	**Boiling Point**	-252.8 °C (-423 °F Hydrogen)
Boiling Point Range	Not available	**Freezing point**	Not available
Evaporation Rate	Not available	**Flammability (solid, gas)**	Flammable gas
Autoignition Temperature	500 °C (932 °F Hydrogen)	**Flash Point**	(Flammable)
Lower Explosive Limit	4 % (Hydrogen)	**Decomposition temperature**	Not available
Upper Explosive Limit	75 % (Hydrogen)	**Vapor Pressure**	Not available

Vapor Density (air=1)	Not available	**Specific Gravity (water=1)**	Not available
Water Solubility	Not available	**Partition coefficient: n-octanol/water**	Not available
Viscosity	Not available	**Kinematic viscosity**	Not available
Solubility (Other)	Not available	**Density**	Not available
Physical Form	compressed gas	**Molecular Weight**	Not available

Section 10 - STABILITY AND REACTIVITY

Reactivity
No reactivity hazard is expected.
Chemical Stability
Stable at normal temperatures and pressure.
Possibility of Hazardous Reactions
Will not polymerize.
Conditions to Avoid
Avoid heat, flames, sparks and other sources of ignition. Minimize contact with material. Containers may rupture or explode if exposed to heat.
Incompatible Materials
combustible materials, halo carbons, halogens, metal oxides, metal salts, metals, oxidizing materials
Hazardous decomposition products
Hydrogen, oxides of arsenic

Section 11 - TOXICOLOGICAL INFORMATION

Information on Likely Routes of Exposure
Inhalation
nausea, vomiting, vomiting, difficulty breathing, irregular heartbeat, headache, drowsiness, fatigue, dizziness, disorientation, mood swings, tingling sensation, loss of coordination, suffocation, convulsions, unconsciousness, coma.
Skin Contact
frostbite.
Eye Contact
frostbite.
Ingestion
Ingestion of a gas in unlikely.
Acute and Chronic Toxicity
Gas mixture inhalation acute toxicity determined according to Compressed Gas Association Standard P-20.
Component Analysis - LD50/LC50
The components of this material have been reviewed in various sources and the following selected endpoints are published:
Hydrogen (1333-74-0)
Inhalation LC50 Rat >15000 ppm 1 h
Arsine (7784-42-1)
Inhalation LC50 Rat 16.2 ppm 4 h
Product Toxicity Data
Acute Toxicity Estimate

No data available.

Immediate Effects

suffocation, frostbite

Delayed Effects

no information on significant adverse effects.

Irritation/Corrosivity Data

No data available.

Respiratory Sensitization

No data available.

Dermal Sensitization

No data available.

Component Carcinogenicity

Arsine	**7784-42-1**
IARC:	Supplement 7 [1987] (Group 1 (carcinogenic to humans))
OSHA:	Present
NIOSH:	potential occupational carcinogen

Germ Cell Mutagenicity

No data available for the mixture.

Tumorigenic Data

No data available

Reproductive Toxicity

No data available for the mixture.

Specific Target Organ Toxicity - Single Exposure

No target organs identified.

Specific Target Organ Toxicity - Repeated Exposure

No target organs identified.

Aspiration hazard

Not applicable.

Medical Conditions Aggravated by Exposure

No data available.

Section 12 - ECOLOGICAL INFORMATION

Component Analysis - Aquatic Toxicity

No LOLI ecotoxicity data are available for this product's components.

Persistence and Degradability

No data available for the mixture.

Bioaccumulative Potential

No data available for the mixture.

Mobility

No data available for the mixture.

Section 13 - DISPOSAL CONSIDERATIONS

Disposal Methods

Dispose in accordance with all applicable regulations. Subject to disposal regulations: U.S. U.S. EPA 40 CFR 262.

Component Waste Numbers

The U.S. EPA has not published waste numbers for this product's components.

Section 14 - TRANSPORT INFORMATION

US DOT Information:
Shipping Name: COMPRESSED GAS, FLAMMABLE, N.O.S. , (Contains: Hydrogen , Arsine)
Hazard Class: 2.1
UN/NA #: UN1954
Required Label(s): 2.1

IMDG Information:
Shipping Name: COMPRESSED GAS, FLAMMABLE, N.O.S. , (Contains: Hydrogen , Arsine)
Hazard Class: 2.1
UN#: UN1954
Required Label(s): 2.1
International Bulk Chemical Code
This material does not contain any chemicals required by the IBC Code to be identified as dangerous chemicals in bulk.

Section 15 - REGULATORY INFORMATION

U.S. Federal Regulations
This material contains one or more of the following chemicals required to be identified under SARA Section 302 (40 CFR 355 Appendix A), SARA Section 313 (40 CFR 372.65), CERCLA (40 CFR 302.4), TSCA 12(b), and/or require an OSHA process safety plan.

Arsine	**7784-42-1**
SARA 302:	100 lb TPQ
OSHA (safety):	100 lb TQ
SARA 304:	100 lb EPCRA RQ

SARA Section 311/312 (40 CFR 370 Subparts B and C) reporting categories
Flammable; Gas Under Pressure; Simple Asphyxiant
U.S. State Regulations
The following components appear on one or more of the following state hazardous substances lists:

Component	CAS	CA	MA	MN	NJ	PA
Hydrogen	**1333-74-0**	Yes	Yes	Yes	Yes	Yes
Arsine	**7784-42-1**	Yes	Yes	Yes	Yes	Yes

Not listed under California Proposition 65
Canada Regulations
Canadian WHMIS Ingredient Disclosure List (IDL)
Components of this material have been checked against the Canadian WHMIS Ingredients Disclosure List. The List is composed of chemicals which must be identified on MSDSs if they are included in products which meet WHMIS criteria specified in the Controlled Products Regulations and are present above the threshold limits listed on the IDL

Arsine	**7784-42-1**
	0.1 %

Component Analysis - Inventory
Hydrogen (1333-74-0)

US	CA	EU	AU	PH	JP - ENCS	JP - ISHL	KR KECI - Annex 1	KR KECI - Annex 2	KR - REACH CCA	CN	NZ	MX	TW	VN (Draft)
Yes	DSL	EIN	Yes	Yes	No	No	Yes	No	No	Yes	Yes	Yes	Yes	Yes

Arsine (7784-42-1)

US	CA	EU	AU	PH	JP - ENCS	JP - ISHL	KR KECI - Annex 1	KR KECI - Annex 2	KR - REACH CCA	CN	NZ	MX	TW	VN (Draft)
Yes	DSL	EIN	Yes	Yes	Yes	No	Yes	No	Yes	Yes	Yes	Yes	Yes	No

Section 16 - OTHER INFORMATION

NFPA Ratings
Health: 2 Fire: 4 Reactivity: 0
Hazard Scale: 0 = Minimal 1 = Slight 2 = Moderate 3 = Serious 4 = Severe
Summary of Changes
Updated: 03/17/2016
Key / Legend
ACGIH - American Conference of Governmental Industrial Hygienists; ADR - European Road Transport; AU - Australia; BOD - Biochemical Oxygen Demand; C - Celsius; CA - Canada; CA/MA/MN/NJ/PA - California/Massachusetts/Minnesota/New Jersey/Pennsylvania*; CAS - Chemical Abstracts Service; CERCLA - Comprehensive Environmental Response, Compensation, and Liability Act; CFR - Code of Federal Regulations (US); CLP - Classification, Labelling, and Packaging; CN - China; CPR - Controlled Products Regulations; DFG - Deutsche Forschungsgemeinschaft; DOT - Department of Transportation; DSD - Dangerous Substance Directive; DSL - Domestic Substances List; EC – European Commission; EEC - European Economic Community; EIN - European Inventory of (Existing Commercial Chemical Substances); EINECS - European Inventory of Existing Commercial Chemical Substances; ENCS - Japan Existing and New Chemical Substance Inventory; EPA - Environmental Protection Agency; EU - European Union; F - Fahrenheit; F - Background (for Venezuela Biological Exposure Indices); IARC - International Agency for Research on Cancer; IATA - International Air Transport Association; ICAO - International Civil Aviation Organization; IDL - Ingredient Disclosure List; IDLH - Immediately Dangerous to Life and Health; IMDG - International Maritime Dangerous Goods; ISHL - Japan Industrial Safety and Health Law; IUCLID - International Uniform Chemical Information Database; JP - Japan; Kow - Octanol/water partition coefficient; KR KECI Annex 1 - Korea Existing Chemicals Inventory (KECI) / Korea Existing Chemicals List (KECL); KR KECI Annex 2 - Korea Existing Chemicals Inventory (KECI) / Korea Existing Chemicals List (KECL) , KR - Korea; LD50/LC50 - Lethal Dose/ Lethal Concentration; LEL - Lower Explosive Limit; LLV - Level Limit Value; LOLI - List Of LIsts™ - ChemADVISOR's Regulatory Database; MAK - Maximum Concentration Value in the Workplace; MEL - Maximum Exposure Limits; MX – Mexico; Ne- Non-

specific; NFPA - National Fire Protection Agency; NIOSH - National Institute for Occupational Safety and Health; NJTSR - New Jersey Trade Secret Registry; Nq - Non-quantitative; NSL – Non-Domestic Substance List (Canada); NTP - National Toxicology Program; NZ - New Zealand; OSHA - Occupational Safety and Health Administration; PEL- Permissible Exposure Limit; PH - Philippines; RCRA - Resource Conservation and Recovery Act; REACH- Registration, Evaluation, Authorisation, and restriction of Chemicals; RID - European Rail Transport; SARA - Superfund Amendments and Reauthorization Act; Sc - Semi-quantitative; STEL - Short-term Exposure Limit; TCCA – Korea Toxic Chemicals Control Act; TDG - Transportation of Dangerous Goods; TLV - Threshold Limit Value; TSCA - Toxic Substances Control Act; TW – Taiwan; TWA - Time Weighted Average; UEL - Upper Explosive Limit; UN/NA - United Nations /North American; US - United States; VLE - Exposure Limit Value (Mexico); VN (Draft) - Vietnam (Draft); WHMIS - Workplace Hazardous Materials Information System (Canada).

Other Information

Disclaimer:

Matheson Tri-Gas, Inc. makes no express or implied warranties, guarantees or representations regarding the product or the information herein, including but not limited to any implied warranty or merchantability or fitness for use. Matheson Tri-Gas, Inc. shall not be liable for any personal injury, property or other damages of any nature, whether compensatory, consequential, exemplary, or otherwise, resulting from any publication, use or reliance upon the information herein.

Safety Data Sheet

Nitric Acid ACS

1. PRODUCT AND COMPANY IDENTIFICATION

Product Name: Nitric Acid ACS

Synonyms/Generic Names: None

Product Number: 3750

Product Use: Industrial, Manufacturing or Laboratory use

Manufacturer: Columbus Chemical Industries, Inc.
N4335 Temkin Rd.
Columbus, WI. 53925

For More Information Call: 920-623-2140 (Monday-Friday 8:00-4:30)

In Case of Emergency Call: CHEMTREC - 800-424-9300 or 703-527-3887 (24 Hours/Day, 7 Days/Week)

2. HAZARDS IDENTIFICATION

OSHA Hazards: Target organ effect, Corrosive, Oxidizer

Target Organs: Lungs, Teeth, Cardiovascular system

Signal Words: Danger

Pictograms:

GHS Classification:

Oxidizing liquids	Category 3
Skin corrosion	Category 1A
Serious eye damage	Category 1

GHS Label Elements, including precautionary statements:

Hazard Statements:

H272	May intensify fire; oxidizer.
H314	Causes severe skin burns and eye damage.

Precautionary Statements:

P210	Keep away from heat/sparks/open flames/hot surfaces. No smoking.
P220	Keep/Store away from clothing and other combustible materials.
P221	Take any precaution to avoid mixing with combustibles.

P260	Do not breathe dust/fume/gas/mist/vapors/spray.
P264	Wash hands thoroughly after handling.
P280	Wear protective gloves/protective clothing/eye protection/face protection.
P301+P330+P331	IF SWALLOWED: Rinse mouth. Do not induce vomiting.
P303+P361+P353	IF ON SKIN (or hair): Take off immediately all contaminated clothing. Rinse skin with water/shower.
P304+P340	IF INHALED: Remove person to fresh air and keep comfortable for breathing.
P305+P351+P338	IF IN EYES: Rinse cautiously with water for several minutes. Remove contact lenses, if present and easy to do. Continue rinsing.
P310	Immediately call a POISON CENTER/doctor/physician.
P363	Wash contaminated clothing before reuse.
P370+P378	In case of fire: Use water spray, dry chemical or carbon dioxide to extinguish.
P405	Store locked up.
P501	Dispose of contents/container in accordance with local regulations.

Potential Health Effects

Eyes	Causes severe eye burns.
Inhalation	May be harmful if inhaled. Material is extremely destructive to the tissue of the mucous membranes and upper respiratory tract.
Skin	May be harmful if absorbed through skin. Causes skin burns.
Ingestion	May be harmful if swallowed.

NFPA Ratings

Health	3
Flammability	0
Reactivity	2
Specific hazard	OX

HMIS Ratings

Health	3
Fire	0
Reactivity	2
Personal	Not Available

3. COMPOSITION/INFORMATION ON INGREDIENTS

Component	Weight %	CAS #	EINECS# / ELINCS#	Formula	Molecular Weight
Nitric Acid	67-70	7697-37-2	231-714-2	HNO_3	63.01 g/mol
Water	Balance	7732-18-5	231-791-2	H_2O	18.00 g/mol

4. FIRST-AID MEASURES

Eyes	Rinse with plenty of water for at least 15 minutes and seek medical attention immediately.
Inhalation	Move casualty to fresh air and keep at rest. If breathing is difficult, give oxygen. If not breathing, give artificial respiration. Get medical attention immediately.
Skin	Immediately flush with plenty of water for at least 15 minutes while removing contaminated clothing and wash using soap. Get medical attention immediately.
Ingestion	**Do Not Induce Vomiting!** Never give anything by mouth to an unconscious person. If conscious, wash out mouth with water. Get medical attention immediately.

5. FIRE-FIGHTING MEASURES

Suitable (and unsuitable) extinguishing media	Product is not flammable. Use appropriate media for adjacent fire. Cool containers with water.
Special protective equipment and precautions for firefighters	Wear self-contained, approved breathing apparatus and full protective clothing, including eye protection and boots.

Specific hazards arising from the chemical	Emits toxic fumes (nitrogen oxides) under fire conditions. (See also Stability and Reactivity section).

6. ACCIDENTAL RELEASE MEASURES

Personal precautions, protective equipment and emergency procedures	See section 8 for recommendations on the use of personal protective equipment.
Environmental precautions	Prevent spillage from entering drains. Any release to the environment may be subject to federal/national or local reporting requirements.
Methods and materials for containment and cleaning up	Neutralize spill with sodium bicarbonate or lime. Absorb spill with noncombustible absorbent material, then place in a suitable container for disposal. Clean surfaces thoroughly with water to remove residual contamination. Dispose of all waste and cleanup materials in accordance with regulations.

7. HANDLING AND STORAGE

Precautions for safe handling
See section 8 for recommendations on the use of personal protective equipment. Use with adequate ventilation. Wash thoroughly after using. Keep container closed when not in use. Avoid formation of aerosols.

Conditions for safe storage, including any incompatibilities
Store in a cool, dry, well ventilated area. Keep away from incompatible materials (see section 10 for incompatibilities).

8. EXPOSURE CONTROLS / PERSONAL PROTECTION

Occupational exposure controls:

Component	Exposure Limits	Basis	Entity
Nitric Acid	2 ppm 5.2 mg/m^3	TLV	ACGIH
	4 ppm 10 mg/m^3	STEL	ACGIH
	2 ppm 5 mg/m^3	PEL	OSHA
	2 ppm 5 mg/m^3	REL	NIOSH
	4 ppm 10 mg/m^3	STEL	NIOSH
	25 ppm	IDLH	NIOSH

TWA: Time Weighted Average over 8 hours of work.
TLV: Threshold Limit Value over 8 hours of work.
REL: Recommended Exposure Limit
PEL: Permissible Exposure Limit
STEL: Short Term Exposure Limit during x minutes.
IDLH: Immediately Dangerous to Life or Health
WEEL: Workplace Environmental Exposure Levels
CEIL: Ceiling

Personal Protection

Eyes	Wear chemical safety glasses or goggles, and face shield.
Inhalation	Provide local exhaust, preferably mechanical. If exposure levels are excessive, use an approved respirator.

Skin	Wear nitrile or rubber gloves, and full body covering. The type of protective equipment must be selected according to the concentration and amount of the dangerous substance at the specific workplace.
Other	Not Available

Other Recommendations
Provide eyewash stations, quick-drench showers and washing facilities accessible to areas of use and handling.

9. PHYSICAL AND CHEMICAL PROPERTIES

Appearance (physical state, color, etc.)	Colorless liquid.
Odor	Not Available
Odor threshold	Not Available
pH	<1 at 20°C (68°F)
Melting point/freezing point	Not Available
Initial boiling point and boiling range	120.5°C (248.9°F)
Flash point	Not Flammable
Evaporation rate	Not Available
Flammability (solid, gas)	Not Flammable
Upper/lower flammability or explosive limit	Not Explosive
Vapor pressure	11 hPa (8 mmHg) at 20°C (68°F)
Vapor density	2.3 (air=1)
Specific gravity	1.42
Solubility (ies)	Soluble in water.
Partition coefficient: n-octanol/water	Not Available
Auto-ignition temperature	Not Available
Decomposition temperature	Not Available

10. STABILITY AND REACTIVITY

Chemical Stability	Stable
Possibility of Hazardous Reactions	Will not occur.
Conditions to Avoid	May discolor on exposure to air and light.
Incompatible Materials	Alkali metals, organic materials, acetic anhydride, acetonitrile, alcohols, acrylonitrile.
Hazardous Decomposition Products	Nitrogen oxides.

11. TOXICOLOGICAL INFORMATION

Acute Toxicity

Skin	Not Available
Eyes	Not Available
Respiratory	Not Available
Ingestion	LDLO Oral – Human – 430 mg/kg

Carcinogenicity

IARC	No components of this product present at levels greater than or equal to 0.1% is identified as probable, possible or confirmed human carcinogen by IARC.
ACGIH	No components of this product present at levels greater than or equal to 0.1% is identified as a carcinogen or potential carcinogen by ACGIH.
NTP	No components of this product present at levels greater than or equal to 0.1% is identified as a known or anticipated carcinogen by NTP.

OSHA	No components of this product present at levels greater than or equal to 0.1% is identified as a carcinogen or potential carcinogen by OSHA.

Signs & Symptoms of Exposure

Skin	Itching, swelling, redness, burning.
Eyes	Itching, redness, burning, watering eyes.
Respiratory	Burning, choking, shortness of breath, coughing, wheezing, dizziness.
Ingestion	Burning, choking, nausea, vomiting, severe pain.

Chronic Toxicity	Not Available
Teratogenicity	Tetotoxicity (except death)
Mutagenicity	Not Available
Embryotoxicity	Tetotoxicity (except death)
Specific Target Organ Toxicity	Not Available
Reproductive Toxicity	Not Available
Respiratory/Skin Sensitization	Not Available

12. ECOLOGICAL INFORMATION

Ecotoxicity

Aquatic Vertebrate	LC50 – Gambusia affinis – 72 mg/L – 96h
Aquatic Invertebrate	Not Available
Terrestrial	Not Available

Persistence and Degradability	Not Available
Bioaccumulative Potential	Not Available
Mobility in Soil	Not Available
PBT and vPvB Assessment	Not Available
Other Adverse Effects	Not Available

13. DISPOSAL CONSIDERATIONS

Waste Product or Residues	Users should review their operations in terms of the applicable federal/national or local regulations and consult with appropriate regulatory agencies if necessary before disposing of waste product or residue.
Product Containers	Users should review their operations in terms of the applicable federal/national or local regulations and consult with appropriate regulatory agencies if necessary before disposing of waste product container.

The information offered in section 13 is for the product as shipped. Use and/or alterations to the product may significantly change the characteristics of the material and alter the waste classification and proper disposal methods.

14. TRANSPORTATION INFORMATION

US DOT	UN2031, Nitric acid, 8, (5.1), pg II
TDG	UN2031, NITRIC ACID, 8, (5.1), PG II
IMDG	UN2031, NITRIC ACID, 8, (5.1), PG II
Marine Pollutant	No
IATA/ICAO	UN2031, Nitric acid, 8, (5.1), pg II

15. REGULATORY INFORMATION

TSCA Inventory Status	All ingredients are listed on the TSCA inventory.
DSCL (EEC)	All ingredients are listed on the DSCL inventory.
California Proposition 65	Not Listed
SARA 302	Listed: Nitric Acid
SARA 304	Listed: Nitric Acid
SARA 311	Reactivity Hazard, Acute Health Hazard, Chronic Health Hazard
SARA 312	Reactivity Hazard, Acute Health Hazard, Chronic Health Hazard
SARA 313	Listed: Nitric Acid
WHMIS Canada	Class C: Oxidizing material Class E: Corrosive material

16. OTHER INFORMATION

Revision	Date
Revision 1	12/04/2012
Revision 2	08/07/2013
Revision 3	01/20/2015
Revision 4	01/02/2017

Disclaimer: The information provided in this Safety Data Sheet (“SDS”) is correct to the best of our knowledge, information and belief at the date of publication. The information in this SDS relates only to the specific Product identified under Section 1, and does not relate to its use in combination with other materials or products, or its use as to any particular process. Those handling, storing or using the Product should satisfy themselves that they have current information regarding the particular way the Product is handled, stored or used and that the same is done in accordance with federal, state and local law. WE DO NOT MAKE ANY WARRANTY, EXPRESS OR IMPLIED, INCLUDING (WITHOUT LIMITATION) WARRANTIES WITH RESPECT TO THE COMPLETENESS OR CONTINUING ACCURACY OF THE INFORMATION CONTAINED HEREIN OR WITH RESPECT TO FITNESS FOR ANY PARTICULAR USE. WE DO NOT ASSUME RESPOSIBILITY AND EXPRESSLY DISCLAIM LIABILITY FOR LOSS, INJURY, DAMAGE OR EXPENSE ARISING OUT OF OR IN ANY WAY CONNECTED WITH THE HANDLING, STORAGE, USE OR DISPOSAL OF THIS PRODUCT.

MATHESON
ask. . .The Gas Professionals™

Safety Data Sheet

Material Name: 5000 PPM DIBORANE IN HYDROGEN, GAS MIX **SDS ID: 00233168**

Section 1 - PRODUCT AND COMPANY IDENTIFICATION

Material Name
5000 PPM DIBORANE IN HYDROGEN, GAS MIX
Chemical Family
inorganic, Gas
Product Use
Industrial and Specialty Gas Applications.
Restrictions on Use
None known.
Details of the supplier of the safety data sheet
MATHESON TRI-GAS, INC.
150 Allen Road, Suite 302
Basking Ridge, NJ 07920
General Information: 1-800-416-2505
Emergency #: 1-800-424-9300 (CHEMTREC)
Outside the US: 703-527-3887 (Call collect)

Section 2 - HAZARDS IDENTIFICATION

Classification in accordance with paragraph (d) of 29 CFR 1910.1200.
Flammable Gases - Category 1
Gases Under Pressure - Compressed gas
Acute Toxicity - Inhalation - Gas - Category 4
Simple Asphyxiant
GHS Label Elements
Symbol(s)

Signal Word
Danger
Hazard Statement(s)
Extremely flammable gas.
Contains gas under pressure; may explode if heated.
Harmful if inhaled.
May displace oxygen and cause rapid suffocation.
Precautionary Statement(s)
Prevention
Keep away from heat, sparks, open flame, and hot surfaces - No smoking.
Avoid breathing gas.
Use only outdoors or in a well-ventilated area.
Response
Leaking gas fire: Do not extinguish, unless leak can be stopped safely.
Eliminate all ignition sources if safe to do so.

IF INHALED: Remove victim to fresh air and keep at rest in a position comfortable for breathing.
Call a POISON CENTER or doctor/physician if you feel unwell.

Storage

Store in a well-ventilated place.
Protect from sunlight.

Disposal

Dispose of contents/container in accordance with local/regional/national/international regulations.

Other Hazards

The rapid release of compressed gas may cause frostbite.

Section 3 - COMPOSITION / INFORMATION ON INGREDIENTS

CAS	Component Name	Percent
1333-74-0	Hydrogen	>99
19287-45-7	Diborane	<1

Section 4 - FIRST AID MEASURES

Inhalation

If adverse effects occur, remove to uncontaminated area. Give artificial respiration if not breathing. If breathing is difficult, oxygen should be administered by qualified personnel. Get immediate medical attention.

Skin

If frostbite or freezing occur, immediately flush with plenty of lukewarm water (105-115°F; 41-46°C). DO NOT USE HOT WATER. If warm water is not available, gently wrap affected parts in blankets. Get immediate medical attention.

Eyes

Wash eyes immediately with large amounts of water, occasionally lifting upper and lower lids, until no evidence of chemical remains. Get medical attention immediately.

Ingestion

If swallowed, get medical attention.

Most Important Symptoms/Effects

Acute

Harmful if inhaled; frostbite, suffocation

Delayed

No data available.

Note to Physicians

For inhalation, consider oxygen.

Section 5 - FIRE FIGHTING MEASURES

Extinguishing Media

Suitable Extinguishing Media

Let burn unless leak can be stopped immediately. Large fires: Use regular foam or flood with fine water spray.

Unsuitable Extinguishing Media

None known.

Special Hazards Arising from the Chemical

Severe fire hazard. Severe explosion hazard. Vapor/air mixtures are explosive. Containers may rupture or explode if exposed to heat. Electrostatic discharges may be generated by flow or agitation resulting in ignition or explosion.

Hazardous Combustion Products

oxides of boron

Fire Fighting Measures

Move container from fire area if it can be done without risk. Cool containers with water spray until well after the fire is out. Stay away from the ends of tanks. For fires in cargo or storage area: Cool containers with water from unmanned hose holder or monitor nozzles until well after fire is out. If this is impossible then take the following precautions: Keep unnecessary people away, isolate hazard area and deny entry. Let the fire burn. Withdraw immediately in case of rising sound from venting safety device or any discoloration of tanks due to fire. For tank, rail car or tank truck: Stop leak if possible without personal risk. Let burn unless leak can be stopped immediately. For smaller tanks or cylinders, extinguish and isolate from other flammables. Evacuation radius: 800 meters (1/2 mile). Do not attempt to extinguish fire unless flow of material can be stopped first. Flood with fine water spray. Cool containers with water spray until well after the fire is out. Apply water from a protected location or from a safe distance. Avoid inhalation of material or combustion by-products. Stay upwind and keep out of low areas. Evacuate if fire gets out of control or containers are directly exposed to fire. Evacuation radius: 500 meters (1/3 mile). Consider downwind evacuation if material is leaking. Stop flow of gas.

Special Protective Equipment and Precautions for Firefighters

Wear full protective fire fighting gear including self contained breathing apparatus (SCBA) for protection against possible exposure.

Section 6 - ACCIDENTAL RELEASE MEASURES

Personal Precautions, Protective Equipment and Emergency Procedures

Wear personal protective clothing and equipment, see Section 8.

Methods and Materials for Containment and Cleaning Up

Leaking gas fire: Do not extinguish, unless leak can be stopped safely. Eliminate all ignition sources if safe to do so. Reduce vapors with water spray. Eliminate all ignition sources if safe to do so. Stop leak if safe to do so - Prevent entry into waterways, drains, or confined areas. Keep unnecessary people away, isolate hazard area and deny entry. Ventilate closed spaces before entering. Damaged cylinders should be handled only by specialists.

Environmental Precautions

Avoid release to the environment. Keep out of water supplies and sewers.

Section 7 - HANDLING AND STORAGE

Precautions for Safe Handling

Extremely flammable gas. Avoid breathing dust/fume/gas/mist/vapors/spray. Contains gas under pressure; may explode if heated. When using, do not eat, drink or smoke. Wash hands thoroughly after handling. Keep away from heat, sparks and flame. Harmful if inhaled. Subject to handling regulations: U.S. OSHA 29 CFR 1910.119.

Conditions for Safe Storage, Including any Incompatibilities

Store in a well-ventilated place.

Protect from sunlight.

Store and handle in accordance with all current regulations and standards. Subject to storage regulations: U.S. OSHA 29 CFR 1910.101. See original container for storage recommendations. Keep separated from incompatible substances.

Incompatible Materials

metals, oxidizing materials, metal oxides, combustible materials, halogens, metal salts, halo carbons

Section 8 - EXPOSURE CONTROLS / PERSONAL PROTECTION

Component Exposure Limits

Hydrogen	**1333-74-0**
ACGIH:	(See Appendix F: Minimal Oxygen Content, explosion hazard)
Diborane	**19287-45-7**

ACGIH:	0.1 ppm TWA
NIOSH:	0.1 ppm TWA ; 0.1 mg/m3 TWA
	15 ppm IDLH
OSHA (US):	0.1 ppm TWA ; 0.1 mg/m3 TWA
Mexico:	0.1 ppm TWA VLE-PPT ; 0.1 mg/m3 TWA VLE-PPT

ACGIH - Threshold Limit Values - Biological Exposure Indices (BEI)
There are no biological limit values for any of this product's components.
Engineering Controls
Ventilation equipment should be explosion-resistant if explosive concentrations of material are present. Provide local exhaust ventilation system. Ensure compliance with applicable exposure limits.
Individual Protection Measures, such as Personal Protective Equipment
Eye/face protection
For the gas: Eye protection not required, but recommended. For the liquid: Wear splash resistant safety goggles. Contact lenses should not be worn. Provide an emergency eye wash fountain and quick drench shower in the immediate work area.
Skin Protection
For the gas: Protective clothing is not required. For the liquid: Wear appropriate protective, cold insulating clothing.
Respiratory Protection
Any self-contained breathing apparatus that has a full facepiece and is operated in a pressure-demand or other positive-pressure mode.
Glove Recommendations
For the gas: Protective clothing is not required. For the liquid: Wear appropriate protective, cold insulating clothing.

Section 9 - PHYSICAL AND CHEMICAL PROPERTIES

Appearance	Not available	**Physical State**	gas
Odor	odorless	**Color**	colorless
Odor Threshold	Not available	**pH**	Not available
Melting Point	-259 °C (-434 °F Hydrogen)	**Boiling Point**	-253 °C (-423 °F Hydrogen)
Boiling Point Range	Not available	**Freezing point**	Not available
Evaporation Rate	Not available	**Flammability (solid, gas)**	Not available
Autoignition Temperature	500 °C (932 °F Hydrogen)	**Flash Point**	Not available
Lower Explosive Limit	4 % (Hydrogen)	**Decomposition temperature**	Not available

Upper Explosive Limit	75 % (Hydrogen)	**Vapor Pressure**	760 mmHg @ -253 °C
Vapor Density (air=1)	0.07 (Hydrogen)	**Specific Gravity (water=1)**	Not available
Water Solubility	1.82 % (@ 20 °C)	**Partition coefficient: n-octanol/water**	Not available
Viscosity	0.008957 cp at 26.8 C (Hydrogen)	**Kinematic viscosity**	Not available
Solubility (Other)	Not available	**Density**	0.0899 g/L at 0 °C
Physical Form	compressed gas	**Taste**	tasteless
Molecular Weight	Not available		

Solvent Solubility
Slightly Soluble
alcohol, ether

Section 10 - STABILITY AND REACTIVITY

Reactivity
No reactivity hazard is expected.
Chemical Stability
Stable at normal temperatures and pressure.
Possibility of Hazardous Reactions
Will not polymerize.
Conditions to Avoid
Avoid heat, flames, sparks and other sources of ignition. Minimize contact with material. Containers may rupture or explode if exposed to heat.
Incompatible Materials
metals, oxidizing materials, metal oxides, combustible materials, halogens, metal salts, halo carbons
Hazardous decomposition products
oxides of boron

Section 11 - TOXICOLOGICAL INFORMATION

Information on Likely Routes of Exposure
Inhalation
Harmful if inhaled, nausea, vomiting, dizziness, tingling sensation, convulsions, coma, difficulty breathing, Unconsciousness, Disorientation, loss of coordination, mood swings, fatigue, headache, irregular heartbeat
Skin Contact
frostbite
Eye Contact
frostbite, blurred vision
Ingestion
ingestion of a gas is unlikely
Acute and Chronic Toxicity
Component Analysis - LD50/LC50

The components of this material have been reviewed in various sources and the following selected endpoints are published:

Hydrogen (1333-74-0)
Inhalation LC50 Rat >15000 ppm 1 h

Diborane (19287-45-7)
Inhalation LC50 Rat 40 ppm 4 h

Product Toxicity Data

Acute Toxicity Estimate
No data available.

Immediate Effects
frostbite, suffocation. Harmful if inhaled.

Delayed Effects
No data available.

Irritation/Corrosivity Data
No animal testing data available for skin or eyes.

Respiratory Sensitization
No data available.

Dermal Sensitization
No data available.

Component Carcinogenicity
None of this product's components are listed by ACGIH, IARC, NTP, DFG or OSHA.

Germ Cell Mutagenicity
No data available for the mixture.

Tumorigenic Data
No data available

Reproductive Toxicity
No data available for the mixture.

Specific Target Organ Toxicity - Single Exposure
Simple Asphyxiant

Specific Target Organ Toxicity - Repeated Exposure
No data available.

Aspiration hazard
Not applicable.

Medical Conditions Aggravated by Exposure
None known.

Section 12 - ECOLOGICAL INFORMATION

Component Analysis - Aquatic Toxicity
No LOLI ecotoxicity data are available for this product's components.

Persistence and Degradability
No data available.

Bioaccumulative Potential
No data available.

Mobility
No data available.

Section 13 - DISPOSAL CONSIDERATIONS

Disposal Methods
Dispose in accordance with all applicable regulations. Subject to disposal regulations: U.S. EPA 40 CFR 262.
Hazardous Waste Number(s): D001.

Component Waste Numbers
The U.S. EPA has not published waste numbers for this product's components.

Section 14 - TRANSPORT INFORMATION

US DOT Information:
Shipping Name: COMPRESSED GAS, FLAMMABLE, N.O.S. , (Contains: Hydrogen , Diborane)
Hazard Class: 2.1
UN/NA #: UN1954
Required Label(s): 2.1

IMDG Information:
Shipping Name: COMPRESSED GAS, FLAMMABLE, N.O.S. , (Contains: Hydrogen , Diborane)
Hazard Class: 2.1
UN#: UN1954
Required Label(s): 2.1
International Bulk Chemical Code
This material does not contain any chemicals required by the IBC Code to be identified as dangerous chemicals in bulk.

Section 15 - REGULATORY INFORMATION

U.S. Federal Regulations
This material contains one or more of the following chemicals required to be identified under SARA Section 302 (40 CFR 355 Appendix A), SARA Section 313 (40 CFR 372.65), CERCLA (40 CFR 302.4), TSCA 12(b), and/or require an OSHA process safety plan.

Diborane	**19287-45-7**
SARA 302:	100 lb TPQ
OSHA (safety):	100 lb TQ
SARA 304:	100 lb EPCRA RQ

SARA Section 311/312 (40 CFR 370 Subparts B and C) reporting categories
Flammable; Gas Under Pressure; Acute toxicity; Simple Asphyxiant
U.S. State Regulations
The following components appear on one or more of the following state hazardous substances lists:

Component	CAS	CA	MA	MN	NJ	PA
Hydrogen	**1333-74-0**	Yes	Yes	Yes	Yes	Yes
Diborane	**19287-45-7**	Yes	Yes	Yes	Yes	Yes

Not listed under California Proposition 65
Canada Regulations
Canadian WHMIS Ingredient Disclosure List (IDL)
Components of this material have been checked against the Canadian WHMIS Ingredients Disclosure List. The List is composed of chemicals which must be identified on MSDSs if they are included in products which meet WHMIS criteria specified in the Controlled Products Regulations and are present above the threshold limits listed on the IDL

Diborane	**19287-45-7**

	1 %

Component Analysis - Inventory
Hydrogen (1333-74-0)

US	CA	EU	AU	PH	JP - ENCS	JP - ISHL	KR KECI - Annex 1	KR KECI - Annex 2	KR - REACH CCA	CN	NZ	MX	TW	VN (Draft)
Yes	DSL	EIN	Yes	Yes	No	No	Yes	No	No	Yes	Yes	Yes	Yes	Yes

Diborane (19287-45-7)

US	CA	EU	AU	PH	JP - ENCS	JP - ISHL	KR KECI - Annex 1	KR KECI - Annex 2	KR - REACH CCA	CN	NZ	MX	TW	VN (Draft)
Yes	DSL	EIN	No	Yes	Yes	Yes	Yes	No	No	Yes	Yes	Yes	Yes	No

Section 16 - OTHER INFORMATION

NFPA Ratings
Health: 2 Fire: 4 Reactivity: 0
Hazard Scale: 0 = Minimal 1 = Slight 2 = Moderate 3 = Serious 4 = Severe
Summary of Changes
Updated: 05/01/2015
Key / Legend
ACGIH - American Conference of Governmental Industrial Hygienists; ADR - European Road Transport; AU - Australia; BOD - Biochemical Oxygen Demand; C - Celsius; CA - Canada; CA/MA/MN/NJ/PA - California/Massachusetts/Minnesota/New Jersey/Pennsylvania*; CAS - Chemical Abstracts Service; CERCLA - Comprehensive Environmental Response, Compensation, and Liability Act; CFR - Code of Federal Regulations (US); CLP - Classification, Labelling, and Packaging; CN - China; CPR - Controlled Products Regulations; DFG - Deutsche Forschungsgemeinschaft; DOT - Department of Transportation; DSD - Dangerous Substance Directive; DSL - Domestic Substances List; EC – European Commission; EEC - European Economic Community; EIN - European Inventory of (Existing Commercial Chemical Substances); EINECS - European Inventory of Existing Commercial Chemical Substances; ENCS - Japan Existing and New Chemical Substance Inventory; EPA - Environmental Protection Agency; EU - European Union; F - Fahrenheit; F - Background (for Venezuela Biological Exposure Indices); IARC - International Agency for Research on Cancer; IATA - International Air Transport Association; ICAO - International Civil Aviation Organization; IDL - Ingredient Disclosure List; IDLH - Immediately Dangerous to Life and Health; IMDG - International Maritime Dangerous Goods; ISHL - Japan Industrial Safety and Health Law; IUCLID - International Uniform Chemical Information Database; JP - Japan; Kow - Octanol/water partition coefficient; KR KECI Annex 1 - Korea Existing Chemicals Inventory (KECI) / Korea Existing Chemicals List (KECL); KR KECI Annex 2 - Korea Existing Chemicals Inventory (KECI) / Korea Existing Chemicals List (KECL) , KR - Korea; LD50/LC50 - Lethal Dose/ Lethal Concentration; LEL - Lower Explosive Limit; LLV - Level Limit Value; LOLI - List Of LIsts™ - ChemADVISOR's Regulatory Database; MAK

- Maximum Concentration Value in the Workplace; MEL - Maximum Exposure Limits; MX – Mexico; Ne- Non-specific; NFPA - National Fire Protection Agency; NIOSH - National Institute for Occupational Safety and Health; NJTSR - New Jersey Trade Secret Registry; Nq - Non-quantitative; NSL – Non-Domestic Substance List (Canada); NTP - National Toxicology Program; NZ - New Zealand; OSHA - Occupational Safety and Health Administration; PEL- Permissible Exposure Limit; PH - Philippines; RCRA - Resource Conservation and Recovery Act; REACH- Registration, Evaluation, Authorisation, and restriction of Chemicals; RID - European Rail Transport; SARA - Superfund Amendments and Reauthorization Act; Sc - Semi-quantitative; STEL - Short-term Exposure Limit; TCCA – Korea Toxic Chemicals Control Act; TDG - Transportation of Dangerous Goods; TLV - Threshold Limit Value; TSCA - Toxic Substances Control Act; TW – Taiwan; TWA - Time Weighted Average; UEL - Upper Explosive Limit; UN/NA - United Nations /North American; US - United States; VLE - Exposure Limit Value (Mexico); VN (Draft) - Vietnam (Draft); WHMIS - Workplace Hazardous Materials Information System (Canada).

Other Information

Disclaimer:

Matheson Tri-Gas, Inc. makes no express or implied warranties, guarantees or representations regarding the product or the information herein, including but not limited to any implied warranty or merchantability or fitness for use. Matheson Tri-Gas, Inc. shall not be liable for any personal injury, property or other damages of any nature, whether compensatory, consequential, exemplary, or otherwise, resulting from any publication, use or reliance upon the information herein.

SAFETY DATA SHEET

1. Identification

Product identifier **Hydrofluoric Acid 49%**

Other means of identification

Product code -

Recommended use Industrial use.

Recommended restrictions None known.

Manufacturer / Importer / Supplier / Distributor information

Supplier/Manufacturer KMG Electronic Chemicals, Inc.

Address 9555 W. Sam Houston Parkway South
Suite 600
Houston, Texas 77099

Telephone 713-600-3800

Emergency telephone 760-476-3960

2. Hazard(s) identification

Physical hazards Not classified.

Health hazards

Acute toxicity, oral	Category 2
Acute toxicity, dermal	Category 1
Acute toxicity, inhalation	Category 2
Skin corrosion/irritation	Category 1A
Specific target organ toxicity, repeated exposure	Category 1 (Kidney, Liver, Lung)

OSHA defined hazards Not classified.

Label elements

Signal word Danger

Hazard statement Fatal if swallowed. Fatal in contact with skin. Fatal if inhaled. Causes severe skin burns and eye damage. Causes damage to organs (Kidney, Liver, Lung) through prolonged or repeated exposure.

Precautionary statement

Prevention Do not breathe mist. Do not get in eyes, on skin, or on clothing. Wear protective gloves/protective clothing/eye protection/face protection. Wear respiratory protection. Use only outdoors or in a well-ventilated area. Do not eat, drink or smoke when using this product. Wash thoroughly after handling.

Response If on skin (or hair): Take off immediately all contaminated clothing. Rinse skin with water/shower. Wash contaminated clothing before reuse. If swallowed: Immediately call a poison center/doctor. Do not induce vomiting. Rinse mouth. If in eyes: Rinse cautiously with water for several minutes. Remove contact lenses, if present and easy to do. Continue rinsing.
Specific treatment is urgent (see this label). Get medical advice/attention if you feel unwell.

Storage Store in a well-ventilated place. Keep container tightly closed. Store locked up.

Disposal Dispose of contents/container in accordance with local/regional/national/international regulations.

Hazard(s) not otherwise classified (HNOC) Not classified.

3. Composition/information on ingredients

Substances

Chemical name	Common name and synonyms	CAS number	%
Hydrofluoric acid		7664-39-3	49

Composition comments All concentrations are in percent by weight unless ingredient is a gas. Gas concentrations are in percent by volume.

4. First-aid measures

Inhalation

Following inhalation exposure, a 2.5% calcium gluconate solution can be given by nebulizer. If breathing is difficult, give oxygen. Immediately call a poison control center or doctor for treatment advice. Move person to fresh air. If breathing has ceased, start mouth-to-mouth artificial respiration with the aid of a pocket mask equipped with a one-way valve or other proper respiratory medical device. Be aware that symptoms of chemical pneumonia (shortness of breath) may occur several hours after exposure.

Skin contact

Immediately remove contaminated clothing, and any extraneous chemical, if possible to do so without delay. Initiate and maintain gentle and continuous irrigation until the patient receives medical care. If medical care is not promptly available, continue to irrigate for one hour. Cover wound with sterile dressing. A physician should be consulted for all exposures. Burns covering an area greater than fifty-two square centimeters (8 square inches) require immediate treatment by a medical doctor. Remove contaminated clothing. With gloved hand apply 2.5% calcium gluconate gel to the burn area.

Eye contact

Immediately flush eyes with plenty of water for at least 15 minutes. Hold eyelids apart. Remove contact lenses, if present and easy to do. Continue rinsing. A 1.0 pct calcium gluconate gel solution can be used to irrigate the eye using a syringe or a continuous irrigation device. Get medical attention immediately.

Ingestion

Immediately call a poison control center or doctor for treatment advice. If ingested give milk or calcium gluconate by mouth. Administer several vials of 10% aqueous calcium gluconate orally. (Calcium carbonate or an antacid containing calcium carbonate or magnesium carbonate or hydroxide may also be used.) Do not give anything by mouth to an unconscious person. Do not induce vomiting. If vomiting occurs, the head should be kept low so that stomach vomit doesn't enter the lungs.

Most important symptoms/effects, acute and delayed

Inhalation: May cause damage to mucous membranes in nose, throat, lungs and bronchial system. Eye contact: May cause temporary blindness and severe eye damage. Corrosive. Skin contact: May cause serious chemical burns to the skin. Ingestion: May cause burns in mucous membranes, throat, esophagus and stomach.

Indication of immediate medical attention and special treatment needed

Treatment : This advice is provided to the attending physician because of the specific properties of hydrogen fluoride and hydrofluoric acid. All cases of ingestion and airway exposure, and skin burns with hydrofluoric acid >20% should be regarded as potentially fatal. Patients who have burns and pain within minutes of exposure can be assumed to have been exposed to concentrated acid and are at risk of rapid clinical deterioration and death. Burns can be accompanied by absorption of fluoride through the skin with sequestration of circulating calcium leading to hypocalcemia and hyperkalemia from the release of cell contents. Fatal cardiac dysrhythmias may ensue. A person who has HF burns greater than 25 square inches or who has been burned with concentrated HF should be admitted immediately to an intensive care unit and carefully monitored by EKG for 24 to 48 hours. Blood sampling should be taken to monitor circulating fluoride, potassium and calcium levels. Hemodialysis may be necessary for fluoride removal and correction of hyperkalemia. HF inhaled in high concentrations may cause acute inflammation and edema of the airway and acute pulmonary edema. Anyone who has been exposed to HF gas or mists and experiences respiratory irritation should be admitted to and monitored in an intensive care unit. In some cases, if the eyes are exposed to HF, it may penetrate to internal structures resulting in irreversible damage. HF skin burns are usually accompanied by severe, throbbing pain, which is thought to be due to irritation of nerve endings by increased levels of potassium ions entering the extracellular space to compensate for the reduced levels of calcium ions, which have been bound to the fluoride. RELIEF OF PAIN IS AN IMPORTANT GUIDE TO THE SUCCESS OF TREATMENT.

General information

In case of shortness of breath, give oxygen. If the heart has stopped, trained personnel should begin cardiopulmonary resuscitation immediately. Ensure that medical personnel are aware of the material(s) involved, and take precautions to protect themselves. Keep victim warm. In case of accident or if you feel unwell, seek medical advice immediately (show the label where possible).

5. Fire-fighting measures

Suitable extinguishing media

This product is not flammable. Use extinguishing agent suitable for type of surrounding fire.

Unsuitable extinguishing media

None known.

Specific hazards arising from the chemical

By heating and fire, toxic and corrosive vapors/gases may be formed.

Special protective equipment and precautions for firefighters

Selection of respiratory protection for firefighting: follow the general fire precautions indicated in the workplace. Self-contained breathing apparatus and full protective clothing must be worn in case of fire.

Fire-fighting equipment/instructions

Selection of respiratory protection for firefighting: follow the general fire precautions indicated in the workplace. Self-contained breathing apparatus and full protective clothing must be worn in case of fire. Use water spray to cool unopened containers. Cool containers with flooding quantities of water until well after fire is out. Prevent runoff from fire control or dilution from entering streams, sewers, or drinking water supply.

6. Accidental release measures

Personal precautions, protective equipment and emergency procedures

Local authorities should be advised if significant spillages cannot be contained. Ensure adequate ventilation. Keep people away from and upwind of spill/leak. Do not touch damaged containers or spilled material unless wearing appropriate protective clothing. Ventilate closed spaces before entering. Keep unnecessary personnel away. Stay upwind. Keep out of low areas. Use personal protection recommended in Section 8 of the SDS.

Methods and materials for containment and cleaning up

Should not be released into the environment. Stop the flow of material, if this is without risk. Prevent entry into waterways, sewers, basements or confined areas.

Large Spills: Dike far ahead of liquid spill for later disposal. Use a non-combustible material like vermiculite, sand or earth to soak up the product and place into a container for later disposal.

Small Spills: Absorb spill with vermiculite or other inert material. Clean contaminated surface thoroughly. After removal flush contaminated area thoroughly with water.

Never return spills in original containers for re-use.

Environmental precautions

Prevent further leakage or spillage if safe to do so. Do not contaminate water.

7. Handling and storage

Precautions for safe handling

Handle and open container with care. Use only with adequate ventilation. Avoid any exposure. Do not handle or store near an open flame, heat or other sources of ignition. Wash thoroughly after handling.

Conditions for safe storage, including any incompatibilities

Keep containers tightly closed in a dry, cool and well-ventilated place. Keep this material away from food, drink and animal feed. Use care in handling/storage. Protect from sunlight. Store away from incompatible materials.

8. Exposure controls/personal protection

Occupational exposure limits

US. OSHA Table Z-1 Limits for Air Contaminants (29 CFR 1910.1000)

Material	Type	Value
Hydrofluoric acid (CAS 7664-39-3)	PEL	2.5 mg/m3

US. OSHA Table Z-2 (29 CFR 1910.1000)

Material	Type	Value
Hydrofluoric acid (CAS 7664-39-3)	TWA	3 ppm

US. ACGIH Threshold Limit Values

Material	Type	Value
Hydrofluoric acid (CAS 7664-39-3)	Ceiling	2 ppm
	TWA	2.5 mg/m3 0.5 ppm

US NIOSH Pocket Guide to Chemical Hazards: Ceiling Limit Value and Time Period (if specified)

Material	Type	Value
Hydrofluoric acid (CAS 7664-39-3)	Ceiling	5 mg/m3 6 ppm

US NIOSH Pocket Guide to Chemical Hazards: Recommended exposure limit (REL)

Material	Type	Value
Hydrofluoric acid (CAS 7664-39-3)	TWA	2.5 mg/m3 3 ppm

Biological limit values

ACGIH Biological Exposure Indices

Material	Value	Determinant	Specimen	Sampling Time
Hydrofluoric acid (CAS 7664-39-3)	3 mg/l	Fluoride	Urine	*
	2 mg/l	Fluoride	Urine	*

* - For sampling details, please see the source document.

Exposure guidelines

US - California OELs: Skin designation

Hydrofluoric acid (CAS 7664-39-3)	Can be absorbed through the skin.

US ACGIH Threshold Limit Values: Skin designation

Hydrofluoric acid (CAS 7664-39-3)	Can be absorbed through the skin.

Appropriate engineering controls If enclosed handling cannot be guaranteed, ventilation and protective clothing must be used. Provide adequate ventilation. Observe Occupational Exposure Limits and minimize the risk of inhalation of vapors. Eye wash facilities and emergency shower must be available when handling this product.

Individual protection measures, such as personal protective equipment

Eye/face protection Wear approved safety glasses or goggles.

Skin protection

Hand protection Wear protective gloves. Be aware that the liquid may penetrate the gloves. Frequent change is advisable. Suitable gloves can be recommended by the glove supplier.

Other Wear appropriate chemical resistant clothing.

Respiratory protection In case of inadequate ventilation use suitable respirator. Wear approved respiratory protection when working with this material unless ventilation or other engineering controls are adequate to keep airborne concentrations below recommended exposure standards. Follow respirator protection program requirements (OSHA 1910.134 or CSA-Z94.4-02(R2008), and ANSI / AIHA Z88.6) for all respirator use.

Thermal hazards Wear appropriate thermal protective clothing, when necessary.

General hygiene considerations When using, do not eat, drink or smoke. Wash hands before breaks and immediately after handling the product. Remove and isolate contaminated clothing and shoes. Handle in accordance with good industrial hygiene and safety practice. Launder contaminated clothing before reuse.

9. Physical and chemical properties

Appearance Colorless liquid.

Physical state Liquid.

Form Liquid.

Color Colorless.

Odor Pungent.

Odor threshold Not available.

pH Acidic

Melting point/freezing point -118.35 °F (-83.53 °C)

Initial boiling point and boiling range Not available.

226.4 °F (108 °C)

Flash point Not available.

Evaporation rate Not available.

Flammability (solid, gas) Not available.

Upper/lower flammability or explosive limits

Flammability limit - lower (%) Not available.

Flammability limit - upper (%) Not available.

Explosive limit - lower (%) Not available.

Explosive limit - upper (%) Not available.

Vapor density 0.7 (air=1)

Relative density Not available.

Solubility(ies) Not available.

Completely soluble

Partition coefficient (n-octanol/water) No data available.

Auto-ignition temperature Not available.

Decomposition temperature Not available.

Viscosity Not available.

Other information

Density	1.15
Molecular formula	HF
Molecular weight	20.01 g/mol

10. Stability and reactivity

Reactivity	Reacts violently with strong bases. Strong alkalis. Strong bases. Sulfides. Cyanides.
Chemical stability	Stable under normal temperature conditions.
Possibility of hazardous reactions	Hazardous polymerization does not occur.
Conditions to avoid	Heat, flames and sparks.
Incompatible materials	Strong alkalis. Metals. Strong oxidizing agents. Strong bases. Sulfides. Cyanides.
Hazardous decomposition products	Hydrogen fluoride. Toxic fluorides. Gives off hydrogen by reaction with metals

11. Toxicological information

Information on likely routes of exposure

Ingestion	Fatal if swallowed. Causes digestive tract burns.
Inhalation	Fatal if inhaled. Causes respiratory tract burns.
Skin contact	Fatal in contact with skin. Causes severe skin burns. Causes permanent skin damage (scarring).
Eye contact	Causes severe eye burns. May cause blindness.
Symptoms related to the physical, chemical and toxicological characteristics	Inhalation: May cause damage to mucous membranes in nose, throat, lungs and bronchial system. Be aware that symptoms of lung edema (shortness of breath) may develop up to 24 hours after exposure. Eye contact: Corrosive. Prolonged contact causes serious eye and tissue damage. May cause blindness. Skin contact: May cause serious chemical burns to the skin. Ingestion: May cause burns in mucous membranes, throat, esophagus and stomach.

Information on toxicological effects

Acute toxicity	Fatal if swallowed. Fatal in contact with skin. Fatal if inhaled.
Skin corrosion/irritation	Causes severe skin burns.
Serious eye damage/eye irritation	Causes severe eye burns.
Respiratory sensitization	No data available.
Skin sensitization	Not a skin sensitizer.
Germ cell mutagenicity	No data available.
Carcinogenicity	Not classified.

IARC Monographs. Overall Evaluation of Carcinogenicity

Hydrofluoric acid (CAS 7664-39-3)	3 Not classifiable as to carcinogenicity to humans.

Reproductive toxicity	No data available.
Specific target organ toxicity - single exposure	No data available.
Specific target organ toxicity - repeated exposure	May cause damage to the following organs through prolonged or repeated exposure: Liver. Kidney. Lung.
Aspiration hazard	Not classified.
Chronic effects	Can cause cardiovascular effects. May cause damage to the liver and kidneys.
Further information	Can cause cardiovascular effects. May cause damage to the liver and kidneys. May cause lung edema. Symptoms may be delayed.

12. Ecological information

Ecotoxicity	The product components are not classified as environmentally hazardous. However, this does not exclude the possibility that large or frequent spills can have a harmful or damaging effect on the environment.
Persistence and degradability	No data available.
Bioaccumulative potential	No data available.
Mobility in soil	No data available.
Mobility in general	The product is water soluble and may spread in water systems.
Other adverse effects	Not established. The product may affect the acidity (pH-factor) in water with risk of harmful effects to aquatic organisms.

13. Disposal considerations

Disposal instructions Dispose of this material and its container at hazardous or special waste collection point. Do not allow this material to drain into sewers/water supplies. Dispose in accordance with all applicable regulations.

Local disposal regulations Dispose of in accordance with local regulations.

Hazardous waste code U134: Waste Hydrofluoric Acid

US RCRA Hazardous Waste U List: Reference

Hydrofluoric acid (CAS 7664-39-3) U134

Waste from residues / unused products Dispose of in accordance with local regulations. Empty containers or liners may retain some product residues. This material and its container must be disposed of in a safe manner (see: Disposal instructions).

Contaminated packaging Dispose of in accordance with local regulations.

14. Transport information

DOT

UN number	UN1790
UN proper shipping name	Hydrofluoric acid, with not more than 60 percent strength
Transport hazard class(es)	8
Subsidiary class(es)	6.1
Packing group	II
Special precautions for user	Not available.
Special provisions	A6, A7, B15, IB2, N5, N34, T8, TP2, TP12
Packaging exceptions	154
Packaging non bulk	202
Packaging bulk	243
ERG number	157

IATA

UN number	UN1790
UN proper shipping name	Hydrofluoric acid 60% or less strength
Transport hazard class(es)	8
Subsidiary class(es)	6.1
Packaging group	II
Environmental hazards	No
Labels required	Not available.
ERG Code	8P
Special precautions for user	Not available.

IMDG

UN number	UN1790
UN proper shipping name	HYDROFLUORIC ACID solution, with not more than 60% hydrogen flouride
Transport hazard class(es)	8
Subsidiary class(es)	6.1
Packaging group	II
Environmental hazards	
Marine pollutant	No
Labels required	Not available.
EmS	F-A, S-B
Special precautions for user	Not available.

Transport in bulk according to Annex II of MARPOL 73/78 and the IBC Code This substance/mixture is not intended to be transported in bulk.

15. Regulatory information

US federal regulations This product is a "Hazardous Chemical" as defined by the OSHA Hazard Communication Standard, 29 CFR 1910.1200.
All components are on the U.S. EPA TSCA Inventory List.

TSCA Section 12(b) Export Notification (40 CFR 707, Subpt. D)

Not regulated.

US. OSHA Specifically Regulated Substances (29 CFR 1910.1001-1050)

Not listed.

CERCLA Hazardous Substance List (40 CFR 302.4)

Hydrofluoric acid (CAS 7664-39-3) LISTED

Superfund Amendments and Reauthorization Act of 1986 (SARA)

Hazard categories	Immediate Hazard - Yes Delayed Hazard - Yes Fire Hazard - No Pressure Hazard - No Reactivity Hazard - No
SARA 302 Extremely hazardous substance	Yes
SARA 311/312 Hazardous chemical	Yes

SARA 313 (TRI reporting)

Chemical name	CAS number	% by wt.
Hydrofluoric acid	7664-39-3	49

Other federal regulations

Clean Air Act (CAA) Section 112 Hazardous Air Pollutants (HAPs) List

Hydrofluoric acid (CAS 7664-39-3)

Clean Air Act (CAA) Section 112(r) Accidental Release Prevention (40 CFR 68.130)

Hydrofluoric acid (CAS 7664-39-3)

Clean Water Act (CWA) Section 112(r) (40 CFR 68.130)	Hazardous substance
Safe Drinking Water Act (SDWA)	4.0 mg/l 4.0 mg/l
Food and Drug Administration (FDA)	Not regulated.

US state regulations This product does not contain a chemical known to the State of California to cause cancer, birth defects or other reproductive harm.

US. Massachusetts RTK - Substance List

Hydrofluoric acid (CAS 7664-39-3)

US. New Jersey Worker and Community Right-to-Know Act

Hydrofluoric acid (CAS 7664-39-3) 100 lbs

US. Pennsylvania RTK - Hazardous Substances

Hydrofluoric acid (CAS 7664-39-3)

US. Rhode Island RTK

Hydrofluoric acid (CAS 7664-39-3)

US. California Proposition 65

US - California Proposition 65 - Carcinogens & Reproductive Toxicity (CRT): Listed substance

Not listed.

International Inventories

Country(s) or region	Inventory name	On inventory (yes/no)*
Australia	Australian Inventory of Chemical Substances (AICS)	Yes
Canada	Domestic Substances List (DSL)	Yes
Canada	Non-Domestic Substances List (NDSL)	No
China	Inventory of Existing Chemical Substances in China (IECSC)	Yes
Europe	European Inventory of Existing Commercial Chemical Substances (EINECS)	Yes
Europe	European List of Notified Chemical Substances (ELINCS)	No
Japan	Inventory of Existing and New Chemical Substances (ENCS)	Yes
Korea	Existing Chemicals List (ECL)	Yes
New Zealand	New Zealand Inventory	Yes
Philippines	Philippine Inventory of Chemicals and Chemical Substances (PICCS)	Yes
United States & Puerto Rico	Toxic Substances Control Act (TSCA) Inventory	Yes

*A "Yes" indicates this product complies with the inventory requirements administered by the governing country(s).
A "No" indicates that one or more components of the product are not listed or exempt from listing on the inventory administered by the governing country(s).

16. Other information, including date of preparation or last revision

Issue date	21-September-2013
Revision date	-

Version # 01

NFPA Ratings

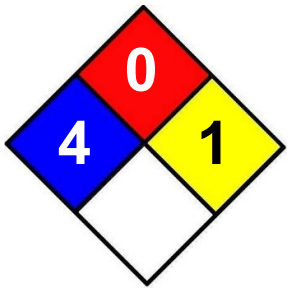

Disclaimer This information is provided without warranty. The information is believed to be correct. This information should be used to make an independent determination of the methods to safeguard workers and the environment.

Startup, Shutdown, Maintenance, and Malfunction Plan

Trinity Consultants

SUMCO PHOENIX CORPORATION

STARTUP, SHUTDOWN, MAINTENANCE, AND MALFUNCTION PLAN

Albuquerque Facility

Revision 0
May 2021

1. INTRODUCTION

This Startup, Shutdown, Maintenance, and Malfunction (SSM/M) plan provides an operational and maintenance strategy for the permitted sources of emissions at the SUMCO Phoenix Corporation – Albuquerque Facility (SUMCO).

This plan addresses the operational strategy if a malfunction occurs that may cause an exceedance of the permitted emission unit of a regulated air contaminant, as well as the anticipated nature of emission during routine startup or shutdown of each source and the steps SUMCO will take to minimize emissions during routine startup or shutdown.

The following definitions from 20.11.41.7 NMAC apply to this SSM/M plan:

"Malfunction" means any sudden, infrequent and not reasonably preventable failure of air pollution control equipment or process equipment, or the failure of a process to operate in a normal or expected manner. Failures that are caused in part by poor maintenance or careless operation are not malfunctions.

"Shutdown" means the cessation of operation of any air pollution control equipment, process equipment or process for any purpose, except routine phasing out of batch process units.

"Startup" means to put a stationary source that has been constructed or modified as authorized by a permit issued pursuant to 20.11.41 NMAC into operation complete with functional air pollution controls, so the process equipment or the process performs for the purpose intended. The operation may be cyclic in response to on-off controls. Repetition of cycles is not startup for purposes of 20.11.41 NMAC.

Note that all the procedures contained herein may be superseded (and thereby fulfilled by) by other NSR and NSPS requirements.

2. MALFUNCTION PROCEDURE

The following procedures will be taken in the event of a malfunction event that may cause an exceedance of the permitted emission limit of a regulated air contaminant:

- SUMCO will note an emissions issue by observing the soot coming out of the stacks.
- The unit will be taken offline for repairs upon the observation of abnormal soot coming out of the stacks.
- The maintenance technician will perform the repairs or adjustments and bring the unit back online. If the work is beyond SUMCO's capability then the work will be contracted out to an outside contractor.
- All work completed will be documented in the SUMCO's Service Request System.
- SUMCO will calculate the emissions of regulated air contaminants from the malfunction event to determine if there has been an exceedance of a permitted emission limit.
- SUMCO will report excess emissions to the City of Albuquerque Environmental Health Department as necessary.

3. EMERGENCY GENERATOR STARTUP, SHUTDOWN, AND MAINTENANCE

3.1 EMERGENCY GENERATOR STARTUP PROCEDURE

A startup event for a Reciprocating Internal Combustion Engine (RICE) occurs when the unit is initially operated after being off.

SUMCO carefully monitors the entire startup process to ensure safety and minimize airborne emissions. The following actions included in the startup SOP are critical for minimizing emissions during startup:

- Minimizing cold engine startups. SUMCO ensures warm engine startup by ensuring engine block heaters are online. These units are checked on a weekly basis.
- Ensuring the engine is achieving good combustion.
- Monitoring the opacity and color of the exhaust gasses and taking the unit offline for repairs upon the observation of abnormal soot coming out of the stacks.

3.2 EMERGENCY GENERATOR SHUTDOWN PROCEDURE

A shutdown event for a RICE occurs when the unit is shut down after a period of operation.

SUMCO carefully monitors the entire shutdown process to ensure safety and minimize airborne emissions. The following actions included in the shutdown SOP are critical for minimizing emissions during engine shutdown:

Removing the full electrical load from the system and initiating a cool down cycle before the engine is stopped.
Monitoring the opacity and color of the exhaust gasses and taking the unit offline for repairs upon the observation of abnormal soot coming out of the stacks.

3.3 EMERGENCY GENERATOR MAINTENANCE

SUMCO ensures the emergency generator RICE are appropriately maintained according to the manufacturer's recommendations.

SUMCO carefully monitors the engines to ensure safety and minimize airborne emissions during regularly scheduled maintenance events. The following actions included in the maintenance SOP are critical for minimizing emissions during the event:

- Ensure the engine is achieving good combustion during the maintenance activity;
- Monitoring the opacity and color of the exhaust gasses and taking the unit offline for repairs upon the observation of abnormal soot coming out of the stacks.

4. BOILER & HUMIDIFIER STARTUP, SHUTDOWN, AND MAINTENANCE

SUMCO operates and maintains the boilers and humidifiers per the manufacturer's recommended guidance. SUMCO ensures that preventive maintenance is completed on each boilers and humidifiers once per year. Specific information is attached detailing boiler operation and maintenance procedures.

5. COOLING TOWER START-UP, SHUTDOWN, AND MAINTENANCE

A cooling tower start-up, shutdown, and maintenance checklist is attached which is based on manufacturer recommendations.

9.7.1.3. Left click on the "Boiler" button.

9.7.1.4. The "Boiler Plant" screen has a line that says "LeadBoiler", followed by a 1 or 2 to denote which boiler is in the lead position. There is also a red button that says "Swap Lead".

9.7.1.5. Place the arrow on the "Swap Lead" button at left click once.

9.7.1.6. Verify on the Boiler Plant screen that the "Lead Boiler" numeral changes.

9.7.1.7. After the "LeadBoiler" screen changes, proceed to the boiler room to verify the boilers have rotated.

9.7.1.8. The boilers will continue to be in a Lead/Lag position with a redundant boiler.

10. Shutdown

10.1. See Figure 1 in Section 13 for the boilers hot water valve schematic.

10.2. Under normal operating conditions, valve No.'s 1 through 6 are normally open (NO). Valve No.'s 7 and 8 are normally closed (NC).

10.3. Prior to valve isolating a boiler from the hot water loop, the boiler must have been in the Lag position for at least 72 hours. This time will allow the boiler to cool to approximately the hot water loop temperature (160-200 F), and prevent the trapped water inside the boiler from boiling and venting once the boiler is isolated.

10.4. To valve isolate Boiler-1

10.4.1. Close V2

10.4.2. Close V3

10.4.3. Close V4

10.4.4. Open V8

10.5. To valve isolate Boiler-2

10.5.1. Close V4

10.5.2. Close V5

10.5.3. Close V6

10.5.4. Open V7

10.6. There is only one electrical power source for each boiler. Opening the electrical disconnect will kill 480V, 3 phase power and to kill the110V control power the fuse needs to be pulled, which is located in a 4 SQ-Box just left of the transformer next to the main disconnects. The main electrical disconnect for Boiler-1 is on the West wall. The main electrical disconnect for Boiler-2 is on the North wall.

11. Maintenance

11.1. The PM program is scheduled/tracked through our Computerized Maintenance Management System.

11.2. Daily PM (DPM) Program: Use ABQ_FAC_FORM-0020, Daily Facilities Checklist to record all data.

11.2.1. Complete the DPM per ABQ_FAC_FORM-0020.

11.3. Monthly PM (MPM) Program: Use ABQ_FAC_FORM-0012 to record all data.

11.3.1. Complete the DPM per ABQ_FAC_FORM-0020.

11.3.2. Record the Lead boiler before starting PM.

11.3.3.

11.3.4. To Test the low water cut off switch on Boiler-1.

11.3.4.1. The low water cut off switch is located in front of boiler -1 up above. The test box is labeled SAFGARD low water cut off.

11.3.4.2. To test the low water cut off switch press the test rocker switch at the bottom of the box. The blower on the boiler should turn off. When the rocker switch is released the boiler should resume to normal operations..

11.3.5. To test the low water cut off switch on Boiler-2.

11.3.5.1. The low water cut off switch is located in front of boiler -2 up above. The test box is labeled SAFGARD low water cut off.

11.3.5.2. To test the low water cut off switch press the test rocker switch at the bottom of the box. The blower on the boiler should turn off. When the rocker switch is released the boiler should resume to normal operations.

11.3.6. Test the flame scanner on the operating boiler.

11.3.6.1. With the boiler running and the flame on, unscrew the scanner where it connects to the blast tube. The flame should go out and the audio alarm on the boiler control panel should go off. The boiler will go into a post purge cycle and shut down.

11.3.6.2. Wipe the inside of the scanner clean using a soft, dry cloth.

11.3.6.3. Install the scanner back into the blast tube and hand-tighten. Do not over tighten.

11.3.6.4. To reset B-1 Press and hold then release the "Reset" button located on the bottom of the Fireye controller (BLL510), which is located behind the front control panel, left hand side.

11.3.6.5. To reset B-2 Press and hold then release the "Reset" button located on the bottom of the Fireye controller (BLL510), which is located behind the front control panel, left hand side.

11.3.7. Record the flame signal strength indicated on the Honeywell control module.

11.3.8. During the MPM, the boilers must be rotated so that the Lead boiler before the PM becomes the Lag boiler after the PM. Each boiler must spend one month as the Lead boiler, followed by one month as the Lag boiler. When rotation is complete and the boiler has cycled two times continue MPM on new lead boiler.

11.3.8.1.1.1. To test the low water cut off switch on Boiler-1.

11.3.8.1.1.2. The low water cut off switch is located in front of boiler-2 up above. The test box is labeled SAFGARD low water cut off.

11.3.8.1.1.3. To test the low water cut off switch press the test rocker switch at the bottom of the box. The blower on the boiler should turn off. When the rocker switch is released the boiler should resume to normal operations.

11.3.8.1.1.4. To test the low water cut off switch on Boiler-2.

11.3.8.1.1.5. The low water cut off switch is located in front of boiler -2 up above. The test box is labeled SAFGARD low water cut off.

11.3.8.1.1.6. To test the low water cut off switch press the test rocker switch at the bottom of the box. The blower on the boiler should turn off. When the rocker switch is released the boiler should resume to normal operations.

11.3.9. Test the flame scanner on the new Lead Boiler.

11.3.9.1. With the boiler running and the flame on, unscrew the scanner where it connects to the blast tube. The flame should go out and the audio alarm on the boiler control panel should go off. The boiler will go into a post purge cycle and shut down.

11.3.9.2. Wipe the inside of the scanner clean using a soft, dry cloth.

11.3.9.3. Install the scanner back into the blast tube and hand- tighten. Do not over tighten.

11.3.9.4. To reset B-1 Press and hold then release the "Reset" button located on the bottom of the Fireye controller (BLL510), which is located behind the front control panel, left hand side.

11.3.9.5. To reset B-2 Press and hold then release the "Reset" button located on the bottom of the Fireye controller (BLL510), which is located behind the front control panel, left hand side.

11.3.10. Record the flame signal strength indicated on the Honeywell control module.

11.4. Quarterly PM (QPM) Program: Use ABQ_FAC_FORM-0012 to record all data.

11.4.1. Complete MPM program on the currently operating boiler and then continue with the QPM on the operating boiler.

11.4.2. Test the low gas pressure switch.

11.4.2.1. With the boiler running, close the main gas valve. The flame will go out and the boiler will go into post purge and shut down.

11.4.2.2. For Boiler-1, open the valve, wait one minute for the timer to reset and press the reset button on the fireye controller (BLL510) To reset B-1 Press and hold then release the "Reset" button located on the bottom of the Fireye controller (BLL510), which is located behind the front control panel, left hand side..

11.4.2.3. For Boiler-2, open the valve, wait one minute for the timer to reset and press the reset button on the fireye controller (BLL510) To reset B-2 Press and hold then release the "Reset" button located on the bottom of the Fireye controller (BLL510), which is located behind the front control panel, left hand side.

11.4.3. Complete a leak check on the gas train.

11.4.3.1. With the main gas valve open, apply leak detection soap to the joints on the gas piping and look for bubbles. Continue checking all joints on the main gas line and the pilot gas line.

11.4.3.2. Report any leaks to the Facility Manager.

11.4.3.3. Wipe off leak detection soap when finished from the piping and the floor.

11.4.4. Inspect the city inspection sticker on the side of the boiler for the expiration date. The inspection sticker is good for two years. If the sticker is set to expire, notify the Facility

Engineer or Maintenance Planner so that the inspector can be scheduled.

11.4.5. The boilers must be rotated so that the Lead boiler before the PM become s the Lag boiler after the PM. Each boiler must spend one month as the Lead boiler, followed b y one month as the Lag boiler. When rotation is complete and boiler has cycled two times continue QPM on new lead boiler. Complete MPM program on the currently operating boiler and then continue with the QPM on the operating boiler.

11.4.6. Test the low gas pressure switch.

11.4.6.1. With the boiler running, close the main gas valve. The flame will go out and the boiler will go into post purge and shut down.

11.4.6.2. For Boiler-1, open the valve, wait one minute for the timer to reset and press the reset button on the fireye controller (BLL510) To reset B-1 Press and hold then release the "Reset" button located on the bottom of the Fireye controller (BLL510), which is located behind the front control panel, left hand side.

11.4.6.3. For Boiler-2, open the valve, wait one minute for the timer to reset and press the reset button on the fireye controller (BLL510) To reset B-2 Press and hold then release the "Reset" button located on the bottom of the Fireye controller (BLL510), which is located behind the front control panel, left hand side.

11.4.7. Complete a leak check on the gas train.

11.4.7.1. With the main gas valve open, apply leak detection soap to the joints on the gas piping and look for bubbles. Continue checking all joints on the main gas line and the pilot gas line.

11.4.7.2. Report any leaks to the Facility Engineer.

11.4.7.3. Wipe off leak detection soap when finished from the piping and the floor.

11.4.8. Inspect the city inspection sticker on the side of the b oiler for the expiration date. The inspection sticker is good for two years. If the sticker is set to expire, notify the Facility Engineer or Maintenance Planner so that the inspector can be scheduled.

11.4.9 Test the pressure relief valves on both boilers.

11.4.9.1 The pressure relief valves (PRV's) are located on the top of the boilers. There are two PRV's for boiler-1 and one PRV for boiler 2.

11.4.9.2 Lift the silver handle on top of the PRV. Verify that water is discharging from the pipe that runs to the floor drain. Hold the valve open for at least 5 seconds to allow any debris on the seat to be flushed out.

11.4.9.3 Release the handle. Insure that water stops flowing and the PRV is not weeping. If the PRV is weeping, open and close the PRV again in an attempt to dislodge any debris that may be preventing the PRV from seating correctly.

11.4.10 Complete the QPM program on both boilers including the rotation of lead and lag.

11.5. Annual PM (APM) Program: Use ABQ_FAC_FORM-0012 to record all data.

11.5.1. Contact the Facility Maintenance planner and schedule the boilers for emissions testing. The testing must include data on low fire, mid fire and high fire. The following operating parameters must also be included:

11.5.1.1. Date and time

11.5.1.2. Stack temperature

11.5.1.3. Percent oxygen

11.5.1.4. Percent excess air

11.5.1.5. Percent carbon dioxide

11.5.1.6. PPM carbon monoxide

11.5.1.7. PPM NOx

11.5.1.8. Percent efficiency

12. Records

12.1. N/A

13. Supplemental Information/Attachment

13.1. The primary Boiler service contractor is Big J&M. 505-328-7574.

CT –1 / 3 / 5 QPM and APM Checklist

Work Order #: _____ *PM Date:* _____

RCM Tech: _____ *Circle all that apply: QPM APM CT-1 CT-3 CT-5*

Type of Service	QPM	APM
Inspect general condition of tower		
Clean Debris from Unit		
Check and Adjust Sump Water Level		
Remove Hot Deck Covers and Inspect Nozzles		
Check and Adjust Fan Belt Tension		
Check Operation of Make-Up Valve		
Check Unit for Unusual Noise or Vibration		
Grease Condenser Water Pump and Motor **(circle one CWP-1 / CWP-2 / CWP-3 / CWP-4)**		
Lubricate Fan Shaft Bearings		
Lubricate Fan Motor Bearings		
Lubricate Motor Base Adjusting Mechanism		
Check Sump Heaters ***(1st QPM and 2nd APM visits)***		
Check Motor Voltage and Current		
Clean Hot Deck Sumps and Nozzles		
Clean Media		
Drain and Clean Sump and Strainer		
Replace Fan Belt		

COMMENTS:

_____

_____

_____

_____

_____

_____

_____

_____

_____

_____

_____

_____ _____

Approval Signature Date

Tool ID	PM	Description	Due	Complete	WO #
CT-1	1Y	COOLING-TOWER-1 PM	3/12/2021	3/22/2021	5671167
CT-2	1Y	COOLING-TOWER-2 PM	3/12/2021	3/22/2021	5671168
CT-3	1Y	COOLING-TOWER-3 PM	3/12/2021	3/19/2021	5671169
CT-4	1Y	COOLING-TOWER-4 PM	3/12/2021	3/19/2021	5671170
CT-5	1Y	COOLING-TOWER-5 PM	3/12/2021	3/19/2021	5671171

Order 5671167

Notification | Reference object | Malfunction, breakdown | Location data | Scheduling overview

Reference object

Functional loc.	1200-90-9170-100	COOLING WATER
Equipment	CT-1	BAC COOLING TOWER-1
Assembly		

Subject

Coding

Description COOLING-TOWER-1 PM

```
03/22/2021 07:23:17 Clovis Mckinstry (CMCKINST)
APM was completed by JCI 3-15-21 see attachment.
```

Responsibilities

Request for Zonal Certification

Trinity Consultants

Veronica Lui

From: Albrecht, Christopher P. <CAlbrecht@cabq.gov>
Sent: Friday, September 16, 2022 1:44 PM
To: Homer, Jeff
Cc: Munoz-Dyer, Carina G.; Adam Erenstein; Neely, Michael; Velazquez, Rafael
Subject: RE: Sumco Permit Modification Follow Up

Mr. Homer,

Thank you very much for providing status of your request from City Albuquerque Zoning (Zoning) for SUMCO's zoning certification. I have also reached out to Zoning to see if there is any way of expediting your request.

We recognize and acknowledge that SUMCO has been at the current location for over 20 years and is properly zoned for your current operations. In the meantime, please submit your permit modification application as soon as possible so we can start processing internally and please note in the application the specific date that you requested this zoning certification from Zoning and the commitment that SUMCO will provide to the Air Quality Program as soon as possible.

Thank you,

Chris

CHRIS ALBRECHT
Associate Director |air quality programs | environmental health department
m 505.350.0090
o 505.768-1965

From: Homer, Jeff <Jeff.Homer@sumcousa.com>
Sent: Tuesday, September 13, 2022 4:46 PM
To: Munoz-Dyer, Carina G. <cmunoz-dyer@cabq.gov>; Albrecht, Christopher P. <CAlbrecht@cabq.gov>
Cc: aerenstein@trinityconsultants.com; Neely, Michael <Michael.Neely@sumcousa.com>; Velazquez, Rafael <Rafael.Velazquez@sumcousa.com>
Subject: RE: Sumco Permit Modification Follow Up

[EXTERNAL] Forward to phishing@cabq.gov and delete if an email causes any concern.

Mr. Albrecht
Ms. Munoz-Dyer

Per our online meeting on 9/2, we have filed our request with the City of Albuquerque for a Zoning Certification. It is our understanding that his can take several weeks. In the interest of time, would you be willing to allow us to submit out permit modification application without the zoning certification so the modification application can be processed at the same time as the zoning certification request? Of course the permit could not be issued without the zoning certification but it is hoped that the two processes could move along simultaneously in view of the urgent situation that is upon us.

SUMCO participated in a City of Albuquerque zoning process in the 2017 – 2018 time period where it was determined that the area in which the SUMCO facility is located is zoned Light Industrial which all agreed was appropriate for the business.

Please let me know if this approach is a possibility.

Thank you

Jeff Homer
480-473-6503

From: Munoz-Dyer, Carina G. [mailto:cmunoz-dyer@cabq.gov]
Sent: Friday, September 2, 2022 12:32 PM
To: Neely, Michael <Michael.Neely@sumcousa.com>; Homer, Jeff <Jeff.Homer@sumcousa.com>; Kauzlaric, Klint <Klint.Kauzlaric@sumcousa.com>
Cc: aerenstein@trinityconsultants.com; Pomo, Elizabeth <epomo@cabq.gov>; Albrecht, Christopher P. <CAlbrecht@cabq.gov>
Subject: Sumco Permit Modification Follow Up

Good afternoon.

Thank you for the meeting this morning,

As discussed the best path forward is for Sumco to submit a permit modification to increase the purchased amount of HCl.

This email is let you know that modeling is not required for this modification, if the only change is to increase the purchased amount of HCl. Today's meeting will be considered as the pre-application meeting for this modification.

There is only one item pending from our end, which is the latest contact list of Neighborhood Associations and Neighborhood Coalitions located within ½ mile of the site. Bernalillo County and the City of Albuquerque update this list within the first days of every month. We will send the latest list, as soon as we get the contact list for September 2022.

Let us know if you have any questions,

Respectfully,
Carina

CARINA G. MUNOZ-DYER
air quality permitting division manager | environmental health department
o 505.768.1948
m 505.391.9617
cabq.gov/environmentalhealth/

The Four-Way Test of the Things We Think, Say or Do:

1. Is it the **TRUTH**?
2. Is it **FAIR** to all concerned?
3. Will it build **GOODWIL**L and **BETTER FRIENDSHIPS**?
4. Will it be **BENEFICIAL** to all concerned?

This e-mail, and any attachments thereto, is intended only for use by the addressee(s) named herein and may contain legally privileged and/or confidential information. If you are not the intended recipient of this e-mail (or the person responsible for delivering this document to the intended recipient), you are hereby notified that any dissemination, distribution, printing or copying of this e-mail, and any attachment thereto, is strictly prohibited. If you have received this e-mail in error, please respond to the individual sending the message, and permanently delete the original and any copy of the e-mail and printout thereof. SUMCO Corporation and its subsidiaries and affiliates are not responsible for errors, omissions or personal comments in this e-mail message.

CITY OF ALBUQUERQUE PLANNING DEPARTMENT
CODE ENFORCEMENT DIVISION

REQUEST FOR ZONAL CERTIFICATION

A zoning certification letter is written confirmation provided by the City of Albuquerque referencing the zoning designation of a particular piece of property, listing certain compliance information, and whether or not the existing development on the property is considered a permitted use.

A completed certification letter includes the assigned address, legal description and zoning designation of the subject site; if applicable, reference to the overlay district, sector plan, development plan, project number and/or pertinent special exceptions(variance, conditional use approvals, etc.), and either a statement confirming zoning compliance or a brief description of any outstanding zoning code violations affecting the site.

A certification letter does not include reference to the zoning designations of abutting or nearby properties; copies of site plans, special exceptions, certificates of occupancy, or other approvals; or reference to building codes, fire codes, subdivision requirements, flood plain standards or similar development prerequisites.

There is a $200 fee plus a 2% Technolgy Fee for each separate parcel, even if the property includes multiple contiguous parcels held in single ownership. A minimum processing period of thirty (30) business days from receipt of the completed application and full payment can be expected; but depending upon the related research, necessary site inspections, and similar service demands, some certification letters may take up to 45 business days to complete.

Please return this completed application form and related fee by mail or in person to:
City of Albuquerque – Code Enforcement Division, 600 2nd St. NW, Suite 500, Albuquerque, New Mexico 87102

APPLICATION FOR ZONAL CERTIFICATION

PROPERTY TO BE CERTIFIED

ADDRESS: 9401 SAN MATEO BLVD NE ALBUQUERQUE NM 87114

LOT(S)*: TR D-1C-1A PLAT OF TRS D-1B-1A & D-1C-1A SISTERS OF THEORDER OF ST DOMINIC CONT 9.8310 AC BLOCK: N/A

SUBDIVISION: Legal Description: TR D-1C-1A PLAT OF TRS D-1B-1A & D-1C-1A SISTERS OF THEORDER OF ST DOMINIC CONT 9.8310 AC

UNIFORM PROPERTY CODE*: 101706547519010240

There is a $165 research/administration fee, $35 application fee and a 2% Technology Fee ($204 total) for each separate parcel included in the property, even if there are multiple parcels held in single ownership and/or assigned the same UPC number.

APPLICANT

NAME: Michael Neely

COMPANY / ORG.: Sumco Phoenix Corporation

ADDRESS: 9401 SAN MATEO BLVD NE ALBUQUERQUE NM 87114

PHONE: 505-604-0478 EMAIL: Michael.Neely@sumcousa.com

LETTER SHOULD BE ADDRESSED TO:

☐ SAME AS APPLICANT

NAME: _____

COMPANY/ORG.: _____

ADDRESS: _____

PHONE: _____ EMAIL: _____

(continued on next page)

CITY OF ALBUQUERQUE PLANNING DEPARTMENT
CODE ENFORCEMENT DIVISION

APPLICATION FOR ZONAL CERTIFICATION

GENERAL PROPERTY INFORMATION

PROPERTY TYPE (retail, multi-family residential, office, etc.): Non-Residential, Light Manufacturing (NR-LM)

SITE AREA (acres or sq. ft.): 9.831 APPROX. AGE(S) OF EXISTING DEVELOPMENT: ~ 28 years

TOTAL NUMBER OF BUILDINGS: 2

USE FOR EACH BUILDING (e.g., 5 multi-family, 1 office, 2 laundry, 1 garage, etc.): Light manufacturing

The main building (9401 SAN MATEO BLVD on east side of property) is in use, The building to the west on the property was vacated from current operations in 2012.

FOR MULTI-FAMILY RESIDENTIAL DEVELOPMENT: N/A total number of units N/A total number of baths

N/A efficiency units

N/A 1 bedroom units

N/A 2 bedroom units

N/A 3 or more bedroom units

NUMBER OF STORIES (note if basements are present): 9401 San Mateo (2), 5031 San Diego (1)

GROSS FLOOR AREA (if multiple buildings, list for each): 9401 San Mateo (88,195), 5031 San Diego (48,411)

TOTAL NUMBER OF SIGNS (both free-standing and building-mounted): 2, both for 9401 San Mateo, building front and entrance perimeter

TOTAL NUMBER OF PARKING SPACES: 273

263 standard spaces

9 handicap accessible spaces

1 motorcycle spaces

I HEREBY AUTHORIZE CITY CODE ENFORCEMENT STAFF TO INSPECT THE SUBJECT PROPERTY FOR THE PURPOSE OF DETERMINING THE STATUS OF THE EXISTING USE AND RELATED ZONING REQUIREMENTS. FURTHER, I UNDERSTAND THAT ANY AND ALL VIOLATIONS NOTED AS A RESULT OF THIS INSPECTION ARE SUBJECT TO IMMEDIATE CORRECTION.

BY: _____ DATE: 09/2/2022
OWNER / AGENT SIGNATURE

OFFICIAL USE ONLY

ACCEPTED BY: _____ DATE: _____

ZONE: _____ ZAP: _____ ASSIGNED TO: _____

Technology Fee 2%

Fee: 441008 - 4919000 $200

Tech Fee: 445048 - 4910000 $ 4

Total: $204

*Applications are not processed until all fees have been paid.

City of Albuquerque

Reference Number: 2022249001-20
Date/Time: 09/06/2022 4:21:23 PM

Departmental Deposit
2022249001-20-1
Departmental Deposit 1@ $200.00
GL #: |110|441008|4919000|||
Allocation 2 1@ $4.00
GL #: |110|445048|4910000|||
Total: $204.00

American Express Service Fee
2022249001-20-2
Total: $5.61

2 ITEMS TOTAL: $209.61

TOTAL: $209.61

DUPLICATE RECEIPT 9/6/2022 4:22:48 PM

American Express $204.00
Method: C
Card Number: **********1007
American Express Service Fee $5.61
Method: C
Card Number: **********1007
Last Name: false
Total Received: $209.61

CE20222249001-20

Thank you for your payment.

S DEPARTMENT
DIVISION

CERTIFICATION

provided by the City of Albuquerque referencing the zoning designation of a particular
mation, and whether or not the existing development on the property is considered a

ned address, legal description and zoning designation of the subject site; if applicable,
lopment plan, project number and/or pertinent special exceptions(variance, conditional
onfirming zoning compliance or a brief description of any outstanding zoning code

the zoning designations of abutting or nearby properties; copies of site plans, special
approvals; or reference to building codes, fire codes, subdivision requirements, flood
ltes.

for each separate parcel, even if the property includes multiple contiguous parcels
ng period of thirty (30) business days from receipt of the completed application
ending upon the related research, necessary site inspections, and similar service
to 45 business days to complete.

d related fee by mail or in person to:
nent Division, 600 2nd St. NW, Suite 500, Albuquerque, New Mexico 87102

ON FOR ZONAL CERTIFICATION

TIFIED
D NE ALBUQUERQUE NM 87114
F ST DOMINIC CONT 8.8310 AC BLOCK: N/A
AT OF TRS D-1B-1A & D-1C-1A SISTERS OF THEORDER OF ST DOMINIC CONT 9.8310 AC
6547519010240

5 application fee and a 2% Technology Fee ($204 total)* for each separate parcel
arcels held in single ownership and/or assigned the same UPC number.

k Corporation
BLVD NE ALBUQUERQUE NM 87114
ADDRESS:
PHONE: 505-604-0478 EMAIL: Michael.Neely@sumcousa.com

LETTER SHOULD BE ADDRESSED TO: ☒ SAME AS APPLICANT

NAME:

COMPANY/ORG.:

ADDRESS:

PHONE: EMAIL:

(continued on next page)

CITY OF ALBUQUERQUE PLANNING DEPARTMENT
CODE ENFORCEMENT DIVISION

APPLICATION FOR ZONAL CERTIFICATION

GENERAL PROPERTY INFORMATION

PROPERTY TYPE (retail, multi-family residential, office, etc.): Non-Residential, Light Manufacturing (NR-LM)

SITE AREA (acres or sq. ft.): 9.831 APPROX. AGE(S) OF EXISTING DEVELOPMENT: ~ 28 years

TOTAL NUMBER OF BUILDINGS: 2

USE FOR EACH BUILDING (e.g., 5 multi-family, 1 office, 2 laundry, 1 garage, etc.): Light manufacturing

The main building (9401 SAN MATEO BLVD on east side of property) is in use, The building to the west on the property was vacated from current operations in 2012.

FOR MULTI-FAMILY RESIDENTIAL DEVELOPMENT: N/A total number of units N/A total number of baths

N/A efficiency units

N/A 1 bedroom units

N/A 2 bedroom units

N/A 3 or more bedroom units

NUMBER OF STORIES (note if basements are present): 9401 San Mateo (2), 5031 San Diego (1)

GROSS FLOOR AREA (if multiple buildings, list for each): 9401 San Mateo (88,195), 5031 San Diego (48,411)

TOTAL NUMBER OF SIGNS (both free-standing and building-mounted): 2, both for 9401 San Mateo, building front and entrance perimeter

TOTAL NUMBER OF PARKING SPACES: 273

263 standard spaces

9 handicap accessible spaces

1 motorcycle spaces

I HEREBY AUTHORIZE CITY CODE ENFORCEMENT STAFF TO INSPECT THE SUBJECT PROPERTY FOR THE PURPOSE OF DETERMINING THE STATUS OF THE EXISTING USE AND RELATED ZONING REQUIREMENTS. FURTHER, I UNDERSTAND THAT ANY AND ALL VIOLATIONS NOTED AS A RESULT OF THIS INSPECTION ARE SUBJECT TO IMMEDIATE CORRECTION.

BY: _____ DATE: 09/2/2022
OWNER / AGENT SIGNATURE

OFFICIAL USE ONLY

ACCEPTED BY: A Delgado DATE: 9.6.22

ZONE: NR-LM ZAP: _____ ASSIGNED TO: Christian

Technology Fee 2%

Fee:	441008 - 4919000	$200
Tech Fee:	445048 - 4910000	$ 4
Total:		$204

*Applications are not processed until all fees have been paid.