City of Albuquerque

Environmental Health Department
Air Quality Program

Permit Application Review Fee Instructions

All source registration, authority-to-construct, and operating permit applications for stationary or portable sources shall be charged an application review fee according to the fee schedule in 20.11.2 NMAC. These filing fees are required for both new construction, reconstruction, and permit modifications applications. Qualified small businesses as defined in 20.11.2 NMAC may be eligible to pay one-half of the application review fees and 100% of all applicable federal program review fees.

Please fill out the permit application review fee checklist and submit with a check or money order payable to the "City of Albuquerque Fund 242" and either:

1. be delivered in person to the Albuquerque Environmental Health Department, 3rd floor, Suite 3023 or Suite 3027, Albuquerque-Bernalillo County Government Center, south building, One Civic Plaza NW, Albuquerque, NM or,

2. mailed to Attn: Air Quality Program, Albuquerque Environmental Health Department, P.O. Box 1293, Albuquerque, NM 87103.

The department will provide a receipt of payment to the applicant. The person delivering or filing a submittal shall attach a copy of the receipt of payment to the submittal as proof of payment Application review fees shall not be refunded without the written approval of the manager. If a refund is requested, a reasonable professional service fee to cover the costs of staff time involved in processing such requests shall be assessed. Please refer to 20.11.2 NMAC (effective January 10, 2011) for more detail concerning the "Fees" regulation as this checklist does not relieve the applicant from any applicable requirement of the regulation.

RECEIVED
JUN - 3 2019

New 2019 appl. re-submitted

City of Albuquerque

Environmental Health Department
Air Quality Program

Permit Application Checklist

Any person seeking a permit under 20.11.41 NMAC, Authority-to-Construct Permits, shall do so by filing a written application with the Department. Prior to ruling a submitted application complete each application submitted shall contain the required items listed below. **This checklist must be returned with the application.**

Applications that are ruled incomplete because of missing information will delay any determination or the issuance of the permit. The Department reserves the right to request additional relevant information prior to ruling the application complete in accordance with 20.11.41 NMAC.

All applicants shall:

1. ☑ Fill out and submit the *Pre-permit Application Meeting Request* form
   a. ☐ Attach a copy to this application
   N/A – A Pre-Permit Application Meeting is not required as Trinity Consultants is familiar with the CABQ permitting process.

2. ☑ Attend the pre-permit application meeting
   a. ☐ Attach a copy of the completed *Pre-permit Application Meeting Checklist* to this application
   N/A – A Pre-Permit Application Meeting is not required as Trinity Consultants is familiar with the CABQ permitting process.

3. ☑ Provide public notice to the appropriate parties
   a. ☑ Attach a copy of the completed *Notice of Intent to Construct* form to this form
      i. Neighborhood Association(s): See attached memo of Neighborhood Associations provided by the City of Albuquerque on 04/12/2019.

      ii. Coalition(s): See attached memo of Neighborhood Coalitions provided by the City of Albuquerque on 04/12/2019.

   b. ☑ Attach a copy of the completed *Public Sign Notice Guideline* form

4. Fill out and submit the *Permit Application*. All applications shall:

   A. ☑ be made on a form provided by the Department. Additional text, tables, calculations or clarifying information may also be attached to the form.

   B. ☑ at the time of application, include documentary proof that all applicable permit application review fees have been paid as required by 20 NMAC 11.02. Please refer to the attached permit application worksheet.

C. ☑ contain the applicant's name, address, and the names and addresses of all other owners or operators of the emission sources.

D. ☑ contain the name, address, and phone number of a person to contact regarding questions about the facility.

E. ☑ indicate the date the application was completed and submitted

F. ☑ contain the company name, which identifies this particular site.

G. ☑ contain a written description of the facility and/or modification including all operations affecting air emissions.

H. ☑ contain the maximum and standard operating schedules for the source after completion of construction or modification in terms of hours per day, days per week, and weeks per year.

I. ☑ provide sufficient information to describe the quantities and nature of any regulated air contaminant (including any amount of a hazardous air pollutant) that the source will emit during:

- Normal operation
- Maximum operation
- Abnormal emissions from malfunction, start-up and shutdown

J. ☑ include anticipated operational needs to allow for reasonable operational scenarios to avoid delays from needing additional permitting in the future.

K. ☑ contain a map, such as a 7.5-minute USGS topographic quadrangle, showing the exact location of the source; and include physical address of the proposed source.

L. ☑ contain an aerial photograph showing the proposed location of each process equipment unit involved in the proposed construction, modification, relocation, or technical revision of the source except for federal agencies or departments involved in national defense or national security as confirmed and agreed to by the department in writing.

M. ☑ contain the UTM zone and UTM coordinates.

N. ☑ include the four digit Standard Industrialized Code (SIC) and the North American Industrial Classification System (NAICS).

O. ☑ contain the types and **potential emission rate** amounts of any regulated air contaminants the new source or modification will emit. Complete appropriate sections of the application; attachments can be used to supplement the application, but not replace it.

P. ☑ contain the types and **controlled** amounts of any regulated air contaminants the new source or modification will emit. Complete appropriate sections of the application; attachments can be used to supplement the application, but not replace it.

Q. ☑ contain the basis or source for each emission rate (include the manufacturer's specification sheets, AP-42 Section sheets, test data, or other data when used as the source).

R. ☑ contain all calculations used to estimate **potential emission rate** and **controlled** emissions.

S. ☑ contain the basis for the estimated control efficiencies and sufficient engineering data for verification of the control equipment operation, including if necessary, design drawings, test reports, and factors which affect the normal operation (e.g. limits to normal operation).

T. ☑ contain fuel data for each existing and/or proposed piece of fuel burning equipment.

U. ☑ contain the anticipated maximum production capacity of the entire facility and the requested production capacity after construction and/or modification.

V. ☑ contain the stack and exhaust gas parameters for all existing and proposed emission stacks.

W. ☑ provide an ambient impact analysis using a atmospheric dispersion model approved by the US Environmental Protection Agency (EPA), and the Department to demonstrate compliance with the ambient air quality standards for the City of Albuquerque and Bernalillo County (See 20.11.01 NMAC). If you are modifying an existing source, the modeling must include the emissions of the entire source to demonstrate the impact the new or modified source(s) will have on existing plant emissions.

X. ☑ contain a preliminary operational plan defining the measures to be taken to mitigate source emissions during malfunction, startup, or shutdown.

Y. ☑ contain a process flow sheet, including a material balance, of all components of the facility that would be involved in routine operations. Indicate all emission points, including fugitive points.

Z. ☑ contain a full description, including all calculations and the basis for all control efficiencies presented, of the equipment to be used for air pollution control. This shall include a process flow sheet or, if the Department so requires, layout and assembly drawings, design plans, test reports and factors which affect the normal equipment operation, including control and/or process equipment operating limitations.

AA. ☑ contain description of the equipment or methods proposed by the applicant to be used for emission measurement.

BB. ☑ be signed under oath or affirmation by a corporate officer, authorized to bind the company into legal agreements, certifying to the best of his or her knowledge the truth of all information submitted.

Albuquerque Environmental Health Department - Air Quality Program
Please mail this application to **P.O. Box 1293, Albuquerque, NM 87103**
or hand deliver between 8:00am - 5:00pm Monday - Friday to:
3rd Floor, Suite 3023 - One Civic Plaza NW, Albuquerque, New Mexico 87103
(505) 768 – 1972 aqd@cabq.gov (505) 768 - 1977 (Fax)

Application for Air Pollutant Sources in Bernalillo County
Source Registration (20.11.40 NMAC) and Construction Permits (20.11.41 NMAC)

Clearly handwrite or type **Corporate Information** **Submittal Date:** 4/11/2019

1. Company Name: Albuquerque Bernalillo County Water Utility Authority 2. Street Address: One Civic Plaza NW, Room 5027

Zip: 87103

3. Company City: Albuquerque 4. Company State: NM 5. Company Phone: (505) 289-3524 6. Company Fax: (505) 289-3062

7. Company Mailing Address: P.O. Box 568, Albuquerque, NM Zip: 87103

8. Company Contact and Title: Joel Berman, Chief Engineer – Distribution, Field Operations Division 9. Phone: (505) 289-3524

10. E-mail: JBerman@abcwua.org

Stationary Source (Facility) Information; **Provide a plot plan (legal description/drawing of facility property) with overlay sketch of facility processes; Location of emission points; Pollutant type and distances to property boundaries]**

1. Facility Name: ABCWUA North Valley Stockpile Site 2. Street Address: 5408 2nd Street NW

3. City: Albuquerque 4. State: NM 5. Facility Phone: (505) 289-3524 6. Facility E-mail: JBerman@abcwua.org

7. Facility Mailing Address (Local): 5408 2nd Street NW Zip: 87103

8. Latitude - Longitude or UTM Coordinates of Facility: Zone 13, 351032 m E, 3889489 m N

9. Facility Contact and Title: Joel Berman, Chief Engineer – Distribution, Field Operations Division 10. Phone: (505) 289-3524

11.E-mail: JBerman@abcwua.org

General Operation Information (if any further information request does not pertain to your facility, write N/A on the line or in the box)

1. Facility Type (description of your facility operations): Spoil Pile

2. Standard Industrial Classification (SIC 4 digit #): 4941 3. North American Industry Classification System (NAICS Code #): 221310

4. Is facility currently operating in Bernalillo County. Yes If yes, date of original construction 7/1/2004. If no, planned startup is___/___/___

5. Is facility permanent Yes If no, give dates for requested temporary operation - from _____/_____/_____ through _____/_____/_____

6. Is facility process equipment new No If no, give actual or estimated manufacture or installation dates in the Process Equipment Table

7. Is application for a modification, expansion, or reconstruction (altering process, or adding, or replacing process equipment, etc.) to an existing facility which will result in a change in emissions No If yes, give the manufacture date of modified, added, or replacement equipment in the Process Equipment Table modification date column, or the operation changes to existing process/equipment which cause an emission increase

8. Is facility operation (circle one)? [Continuous Intermittent Batch]

City of Albuquerque

Environmental Health Department
Air Quality Program

Permit Application Review Fee Instructions

All source registration, authority-to-construct, and operating permit applications for stationary or portable sources shall be charged an application review fee according to the fee schedule in 20.11.2 NMAC. These filing fees are required for both new construction, reconstruction, and permit modifications applications. Qualified small businesses as defined in 20.11.2 NMAC may be eligible to pay one-half of the application review fees and 100% of all applicable federal program review fees.

Please fill out the permit application review fee checklist and submit with a check or money order payable to the "City of Albuquerque Fund 242" and either:

1. be delivered in person to the Albuquerque Environmental Health Department, 3rd floor, Suite 3023 or Suite 3027, Albuquerque-Bernalillo County Government Center, south building, One Civic Plaza NW, Albuquerque, NM or,

2. mailed to Attn: Air Quality Program, Albuquerque Environmental Health Department, P.O. Box 1293, Albuquerque, NM 87103.

The department will provide a receipt of payment to the applicant. The person delivering or filing a submittal shall attach a copy of the receipt of payment to the submittal as proof of payment Application review fees shall not be refunded without the written approval of the manager. If a refund is requested, a reasonable professional service fee to cover the costs of staff time involved in processing such requests shall be assessed. Please refer to 20.11.2 NMAC (effective January 10, 2011) for more detail concerning the "Fees" regulation as this checklist does not relieve the applicant from any applicable requirement of the regulation.

I, the undersigned, a responsible officer of the appl...nt company, certify that to the best of my knowledge, the information stated on this application, together with associated drawings, specifications, and other data, give a true and complete representation of the existing, modified existing, or planned new stationary source with respect to air pollution sources and control equipment. I also understand that any significant omissions, errors, or misrepresentations in these data will be cause for revocation of part or all of the resulting registration or permit.

Signed this 7th day of May, 20 19

John M. Stump III
Print Name

Chief Operating Officer
Print Title

John M Stump III
Signature

COPY

I, the undersigned, a responsible officer of the applic[illegible]ompany, certify that to the best of my knowledge, t[illegible] information stated on this application, together with associated drawings, specifications, and other d[illegible]ive a true and complete representation of the exist[illegible]modified existing, or planned new stationary source with respect to air pollution sources and control equipment. I also understand that any significant omissions, errors, or misrepresentations in these data will be cause for revocation of part or all of the resulting registration or permit.

Signed this 7th day of May, 20 19

John M. Stamp III
Print Name

Chief Operating Officer
Print Title

Signature

ORIGINAL

MATERIAL AND FUEL STORAGE TABLE

(Tanks, barrels, silos, stockpiles, etc.) Copy this table if additional space is needed (begin numbering with 4., 5., etc.)

Storage Equipment	Product Stored	Capacity (bbls - tons gal - acres,etc)	Above or Below Ground	Construction (welded, riveted) & Color	Install Date	Loading Rate	Offloading Rate	True Vapor Pressure	Control Equipment	Seal Type	% Eff.
Example 1. Tank	diesel fuel	5,000 gal.	Below	welded/ brown	3/93	3000gal HR. ~~YR.~~	500 gal. - HR. ~~YR.~~	N/A Psia	N/A	N/A	N/A
Example 2. Barrels	Solvent	55 gal Drum	Above - in storage room	welded/green	N/A	N/A HR. YR.	N/A HR. YR.	N/A Psia	N/A	N/A	N/A
N/A – There are not materials or fuels stored at the facility.											
2.						HR. YR.	HR. YR.	Psia			
3.						HR. YR.	HR. YR.	Psia			

1. Basis for Loading/Offloading Rate (Manufacturers data, Field Observation/Test, etc.)_____
   Submit information for each unit as an attachment.

2. Basis for Control Equipment % Efficiency (Manufacturers data, Field Observation/Test, AP-42, etc.)_____
   Submit information for each unit as an attachment.

STACK AND EMISSION MEASUREMENT TABLE

If any equipment from the Process Equipment Table (Page 2) is also listed in this Stack Table, use the same numbered line for the Process Equipment unit on both Tables to show the association between the Process Equipment and it's Stack. Copy this table if additional space is needed (begin numbering with 4., 5., etc.).

Process Equipment	Pollutant (CO,NOx,TSP, Toluene,etc)	Control Equipment	Control Efficiency	Stack Height & Diameter in feet	Stack Temp.	Stack Velocity & Exit Direction	Emission Measurement Equipment Type	Range-Sensitivity-Accuracy-
Example 1. Generator	CO, NOx, TSP, SO_2, NMHC	N/A	N/A	18 ft. - H 0.8 ft. - D	225 °F	6,000 ft^3/min - V Exit - upward	N/A	N/A
Example 2. Spray Gun	TSP, xylene, toluene, MIBK	Spray Booth	99% for TSP	9 ft. - H 0.5 ft. -D	ambient	10,000 ft^3/min - V Exit - horizontal	N/A	N/A
1. ENG-1	NO_x, CO, VOCs, SO_x, TSP, PM_{10}, $PM_{2.5}$, HAPs	Reduced hours of operation	N/A	3.048 m – H 0.051 m – D	727.6 K	99.43 m/s - V	N/A	N/A
2. SCRN-1	TSP, PM_{10}, $PM_{2.5}$	Reduced hours of operation	N/A	3.048 m – H 2.64 m by 4.064 m - D	Ambient	N/A	N/A	N/A
3. SCRN-2	TSP, PM_{10}, $PM_{2.5}$	Reduced hours of operation	N/A	3.048 m – H 2.64 m by 4.064 m - D	Ambient	N/A	N/A	N/A
4. HAUL	TSP, PM_{10}, $PM_{2.5}$	Watering	60% for TSP, PM_{10}, $PM_{2.5}$	N/A	N/A	N/A	N/A	N/A
5. STCKPLEWORK	TSP, PM_{10}, $PM_{2.5}$	Reduced hours of operation	N/A	N/A	N/A	N/A	N/A	N/A

1. Basis for Control Equipment % Efficiency (Manufacturers data, Field Observation/Test, AP-42, etc.) Submit information for each unit as an attachment

_____

ADDITIONAL COMMENTS OR INFORMATION

**TOXIC EMISSIONS

VOLATILE, HAZARDOUS, & VOLATILE HAZARDOUS AIR POLLUTANT EMISSION TABLE

Product Categories (Coatings, Solvents, Thinners, etc.)	Volatile Organic Compound (VOC), Hazardous Air Pollutant (HAP), or Volatile Hazardous Air Pollutant (VHAP) Primary To The Representative As Purchased Product	Chemical Abstract Service Number (CAS) Of VOC, HAP, Or VHAP From Representative As Purchased Product	VOC, HAP, Or VHAP Concentration Of Representative As Purchased Product (pounds/gallon, or %)	1. How were Concentrations Determined (CPDS, MSDS, etc.)	Total Product Purchases For Category	(-)	Quantity Of Product Recovered & Disposed For Category	(=)	Total Product Usage For Category
EXAMPLE 1. Cleaning Solvents	TOLUENE	108883	70%	PRODUCT LABEL	lbs/yr 200 gal/yr	(-)	lbs/yr 50 gal/yr	(=)	lbs/yr 150 gal/yr
N/A – There are no volatile, hazardous, or volatile hazardous air pollutants at the facility.									
2.					lbs/yr gal/yr	(-)	lbs/yr gal/yr	(=)	lbs/yr gal/yr
3.					lbs/yr gal/yr	(-)	lbs/yr gal/yr	(=)	lbs/yr gal/yr

1. Basis for percent (%) determinations (Certified Product Data Sheets, Material Safety Data Sheets, etc.). Submit, as an attachment, information on one (1) product from each Category listed above which best represents the average of all the products purchased in that Category.

NOTE: **A REGISTRATION IS REQUIRED, AT MINIMUM, FOR ANY AMOUNT OF HAP OR VHAP EMISSION. A PERMIT MAY BE REQUIRED FOR THESE EMISSIONS, IF THE SOURCE MEETS THE REQUIREMENTS OF PART 41.

CONTROLLED EMISSIONS OF INDIVIDUAL AND COMBINED PROCESSES

(Based on current operations with emission controls OR requested operations with emission controls)

Process Equipment Units listed on this Table should match up to the same numbered line and Unit as listed on Uncontrolled Table (pg.2)

Process Equipment Unit	Carbon Monoxide (CO)	Oxides of Nitrogen (NOx)	Nonmethane Hydrocarbons NMHC (VOCs)	Oxides of Sulfur (SOx)	Total Suspended Particulate Matter (TSP)	Control Equipment	% Efficiency
I. Example Generator	1. 9.1 lbs/hr	27.7 lbs/hr	1.3 lbs/hr	0.5 lbs/hr	2.0 lbs/hr	Operating Hours	N/A
	1a. 18.2 tons/yr	55.4 tons/yr	2.6 tons/yr	1.0 tons/yr	4.0 tons/yr		
1. ENG-1	1. 0.46 lbs/hr	1.0 lbs/hr	0.17 lbs/hr	0.14 lbs/hr	0.15 lbs/hr	2,496 hours	N/A
	1a. 0.57 tons/yr	1.3 tons/yr	0.22 tons/yr	0.18 tons/yr	0.19 tons/yr		
2. SCRN-1	2. - lbs/hr	- lbs/hr	- lbs/hr	- lbs/hr	0.25 lbs/hr	2,496 hours & Watering	N/A
	2a. - tons/yr	- tons/yr	- tons/yr	- tons/yr	0.31 tons/yr		
3. SCRN-2	3. - lbs/hr	- lbs/hr	- lbs/hr	- lbs/hr	0.14 lbs/hr	2,496 hours & Watering	N/A
	3a. - tons/yr	- tons/yr	- tons/yr	- tons/yr	0.18 tons/yr		
4. HAUL	4. lbs/hr	lbs/hr	- lbs/hr	- lbs/hr	0.42 lbs/hr	Watering	60%
	4a. tons/yr	tons/yr	- tons/yr	- tons/yr	1.5 tons/yr		
5. STCKPLEWORK	5. lbs/hr	lbs/hr	- lbs/hr	- lbs/hr	0.095 lbs/hr	2,496 hours	N/A
	5a. tons/yr	tons/yr	- tons/yr	- tons/yr	0.12 tons/yr		

1. Basis for Control Equipment % Efficiency (Manufacturers data, Field Observation/Test, AP-42, etc.)
   Submit information for each unit as an attachment _____

2. Explain and give estimated amounts of any Fugitive Emissions associated with facility processes _____

UNCONTROLLED EMISSIONS OF INDIVIDUAL AND COMBINED PROCESSES

(Process potential under physical/operational limitations during a 24 hr/day and 365 day/year = 8,760 hrs)

Process Equipment Unit*		Carbon Monoxide (CO)	Oxides of Nitrogen (NOx)	Nonmethane Hydrocarbons NMHC (VOCs)	Oxides of Sulfur (SOx)	Total Suspended Particulate Matter (TSP)	Method(s) used for Determination of Emissions (AP-42, Material balance, field tests, manufacturers' data, etc.)
Example I. Generator	1.	9.1 lbs/hr	27.7 lbs/hr	1.3 lbs/hr	0.5 lbs/hr	2.0 lbs/hr	AP-42
	1a.	39.9 tons/yr	121.3 tons/yr	5.7 tons/yr	2.2 tons/yr	8.8 tons/yr	
1. ENG-1	1.	0.46 lbs/hr	1.0 lbs/hr	0.17 lbs/hr	0.14 lbs/hr	0.15 lbs/hr	AP-42
	1a.	2.0 tons/yr	4.6 tons/yr	0.76 tons/yr	0.62 tons/yr	0.66 tons/yr	
2. SCRN-1	2.	- lbs/hr	- lbs/hr	- lbs/hr	- lbs/hr	4.7 lbs/hr	Site Data AP-42
	2a.	- tons/yr	- tons /yr	- tons/yr	- tons/yr	20.5 tons/yr	
3. SCRN-2	3.	- lbs/hr	- lbs/hr	- lbs/hr	- lbs/hr	4.7 lbs/hr	Site Data AP-42
	3a.	- tons/yr	- tons /yr	- tons/yr	- tons/ yr	20.5 tons/yr	
4. HAUL	4.	- lbs/hr	- lbs/hr	- lbs/hr	- lbs/hr	1.1 lbs/hr	AP-42
	4a.	- tons/yr	- tons /yr	- tons/yr	- tons/ yr	3.8 tons/yr	
5. STCKPLEWORK	5.	- lbs/hr	- lbs/hr	- lbs/hr	- lbs/hr	0.25 lbs/hr	Site Data AP-42
	5a.	- tons/yr	- tons /yr	- tons/yr	- tons/ yr	1.08 tons/yr	

* **If any one (1) of these process units, <u>or</u> combination of units, has an uncontrolled emission greater than (>) 10 lbs/hr or 25 tons/yr for any of the above pollutants (based on 8760 hrs of operation), then a permit will be required. Complete this application along with additional checklist information requested on accompanying instruction sheet.**

* **If all of these process units, individually <u>and</u> in combination, have an uncontrolled emission less than or equal to (≤) 10 lbs/hr or 25 tons/yr for all of the above pollutants (based on 8760 hrs of operation), but > 1 ton/yr for any of the above pollutants - then a source registration is required.**

Note: <u>If your source does not require a registration or permit, based on above pollutant emissions, complete the remainder of this application to determine if a registration or permit would be required for any Toxic or Hazardous air pollutants used at your facility.</u>

<u>Copy this page if additional space is needed for either table (begin numbering with 4., 5., etc.)</u>

15. Permitting Action Being Requested

☐ New Permit ☑ Permit Modification ☐ Technical Permit Revision ☐ Administrative Permit Revision

Current Permit #: 3278 Current Permit #: _____ Current Permit #: _____

PROCESS EQUIPMENT TABLE

(Generator-Crusher-Screen-Conveyor-Boiler-Mixer-Spray Guns-Saws-Sander-Oven-Dryer-Furnace-Incinerator, etc.)

Process Equipment Unit	Manufacturer	Model #	Serial #	Manufacture Date	Installation Date	Modification Date	Size or Process Rate (Hp;kW;Btu;ft³;lbs; tons;yd³;etc.)	Fuel Type
Example 1. Generator	Unigen	B-2500	A56732195C-222	7/96	7/97	N/A	250 Hp - HR. ~~YR.~~	Diesel
Example 2. Spray Gun	HVLP Systems	Spray-N-Stay 1100	k26-56-95	01/97	11/97	N/A	0.25 gal. - HR. ~~YR.~~	Electric Compressor
1. ENG-1	Deutz	F3L913	8736524	7/27/05	~2005	N/A	55 hp	Diesel
2. SCRN-1	CEC	Box-it 710	05474-21	7/27/05	~2005	N/A	150 ton/hr	N/A
3. SCRN-2	Condore	N/A	N/A	N/A	~2005	N/A	150 ton/hr	N/A
4. HAUL	N/A	N/A	N/A	N/A	N/A	N/A	1,755.4 miles/yr	N/A
5. STCKPLEWORK	N/A	N/A	N/A	N/A	N/A	N/A	Varies depending on Drop Point Location	N/A

1. Basis for Equipment Size or Process Rate (Manufacturers data, Field Observation/Test, etc.)_____ Submit information for each unit as an attachment

EXEMPTED SOURCES AND EXEMPTED ACTIVITES

(Generator-Crusher-Screen-Conveyor-Boiler-Mixer-Spray Guns-Saws-Sander-Oven-Dryer-Furnace-Incinerator, etc.)

Process Equipment Unit	Manufacturer	Model #	Serial #	Manufacture Date	Installation Date	Modification Date	Size or Process Rate (Hp;kW;Btu;ft³;lbs; tons;yd³;etc.)	Fuel Type
Example 1. Generator	Unigen	B-2500	A56732195C-222	7/96	7/97	N/A	250 Hp - HR. ~~YR.~~	Diesel
Example 2. Spray Gun	HVLP Systems	Spray-N-Stay 1100	k26-56-95	01/97	11/97	N/A	0.25 gal. - HR. ~~YR.~~	Electric Compressor
N/A – There are not exempted sources or activities being included in this application.								
2.							HR. YR.	
3.							HR. YR.	

1. Basis for Equipment Size or Process Rate (Manufacturers data, Field Observation/Test, etc.)_____ Submit information for each unit as an attachment

9. Estimated % of production Jan-Mar: 25% Apr-Jun: 25% Jul-Sep: 25% Oct-Dec: 25%

10. Current or requested operating times of facility: 12 hrs/day 4 days/wk 4.33 wks/mo 12 mos/yr 11. Business hrs: 6 am to 6 pm

12. Will there be special or seasonal operating times other than shown above No If yes, explain_____

13. Raw materials processed: C&D Debris 14. Saleable item(s) produced: N/A

PERMIT MODIFICATION APPLICATION

Albuquerque Bernalillo County Water Utility Authority
North Valley Stockpile Site

Albuquerque Bernalillo County
Water Utility Authority

Prepared By:

Joel Berman – Chief Engineer of Distribution, Field Operations Division
Albuquerque Bernalillo County Water Utility Authority
5408 2nd Street NW
Albuquerque, NM 87103
(505) 289-3524

Andrew Glen, PhD – Managing Consultant

TRINITY CONSULTANTS
9400 Holly Ave NE
Building 3, Suite 300
Albuquerque, NM 87122
(505) 266-6611

May 14, 2019

Project 193201.0068

Trinity Consultants

Environmental solutions delivered uncommonly well

TABLE OF CONTENTS

1. SUMMARY

This application is a permit modification for Construction Permit #3278 for the North Valley Stockpile Site, which is owned and operated by Albuquerque Bernalillo County Water Utility Authority (ABCWUA). The facility is located at 5408 2nd Street NW in Albuquerque, New Mexico. The North Valley Stockpile Site can process up to 150 tons per hour of material. Material being processed consists of dirt, rock, asphalt, and other debris from repairing water utility infrastructure. Material is hauled onsite and placed in a stockpile. The material is then moved from the initial stockpile to one of the screening units. The material is screened until the majority of debris is removed. The clean dirt is moved into the clean fill stockpile and the debris is moved into another stockpile (debris stockpile). The clean dirt is able to be reused to backfill other construction projects. The debris is hauled offsite for disposal or recycle.

This modification seeks to apply all recommendations and revisions noted by Ms. Carina G. Munoz-Dyer in her February 14, 2019 letter to Dr. Andrew Glen and previous correspondence between ABCWUA, Trinity Consultants and the City of Albuquerque Air Quality Program. The calculations will now reflect proposed operating hours for the screens and generator (Units ENG-1, SCRN-1, and SCRN-2) to operating four (4) weekdays per week, 6 am to 6 pm. Also, by recommendation of the Air Quality Program (AQP), the weight/volume ratio of 1.28 tons per cubic yard will be used in the screening calculation for material handling. Finally, the following revisions, agreed upon with the AQP, are requested to be made to the permit #3278.

- Conditions I.1(f), I.2(b); I.3(f),(g); I.5(a)&(b) and I.6(a) – NSPS OOO applicability.
    - Screens 01 and 02 are not subject to NSPS OOO regulations and these conditions will be removed from the permit.
- Condition I.1.(k)(vii) – Watering of stockpiles/screens
    - The control efficiency on the screens will be modified from 95% to 85% to reflect the control efficiency percentage that ABCWUA used in the TSP, PM_{10} and $PM_{2.5}$ controlled emissions calculations for the screens. The condition will read as follows: "This condition is being imposed to maintain an 85% control efficiency of fugitive emissions during screening of materials."
- Condition I.1(k)(ix) – Change of conditions: Number of haul road trips.
    - Control efficiency in haul roads will be modified from 95% to 60% per NMED guidelines. The last sentence of the condition will be removed.
- Conditions I.1.(g) & (k)(xii), (xiii); I.2(d); and I.6(a) – Engine ENG-01
    - NSPS IIII Applicability NSPS IIII conditions for ENG-01 will be removed from the permit and the NESHAP ZZZZ applicable requirements will added.
    - Although the engine is subject to NESHAP ZZZZ, the engine does not have any performance tests under this regulation. However, the engine will be subject to NMAC 20.11.5.13.C.
- Conditions with Typos
    - Corrections will be made to conditions I.1(k)(viii),(ix)&(x), I.3(e), and I.4(e) to address several typographical errors.
        - Typo in I.1.(k)(viii) – Please update the word **'traps'** to **'tarps'**.
        - Typo in I.1.(k)(ix) – Please remove the following language from this condition: "shall maintain gravel and millings". Also, the following sentence should be updated to reflect the actual control efficiency used in the emission calculations that were submitted: This condition is being imposed to maintain a 60% control efficiency of fugitive dust emissions from haul roads. We would like to request that the final sentence of this condition be updated to include the reasonably available control measures for fugitive dust.

- Typo in I.1.(k)(x) – Please update the condition as follows: Haul roads shall use control measures to prevent and/or reduce fugitive dust, including watering the unpaved roads twice a day to stabilize the unpaved roads.
- Typo in I.3.(e) – Please update the condition as follows: Maintain records of the application of water to vehicle traffic areas and haul roads.
- Typo in I.4.(e) – Please update the condition as follows: Monitor the application of water to vehicle traffic areas and haul roads.

Upon completion of the permit modification by the AQP, ABCWUA requests to review a draft of the permit before final issuance.

2. PROCESS DESCRIPTION

This section describes the processes currently taking place at the North Valley Stockpile site and the modifications to the operating hours and calculation methodologies.

SCREENING ENGINE (ENG-1)

Located at the facility is one diesel powered screening engine. This engine powers the vibratory screen (SCRN-1). Emissions for the engine were calculated using data collected onsite by ABCWUA. The emission factor for NO_x is based on EPA Tier 1 standards for diesel engines. The emission factors for CO, SO_2, and PM are from AP-42 Section 3, Table 3.3-1. The emission factor for TOC is determined by adding the exhaust and crankcase TOC emission factors from AP-42 Section 3, Table 3.3-1. HAP emission factors are from AP-42 Section 3, Table 3.3-2. It was conservatively assumed that emissions of $TSP=PM_{10}=PM_{2.5}$. A safety factor of 25% was included to account for any variation in the amount of material being processed by the vibratory screen.

SCREENING UNITS (SCRN-1 AND SCRN-2)

There are two screening units located at the facility. SCRN-1 is a vibratory screen and SCRN-2 is a non-vibratory screen. The vibratory screen is powered by a diesel engine (unit ENG-1). Emissions for the screens were calculated using data collected onsite by ABCWUA. The emission factors are from AP-42 Section 11.19.2, Table 11.19.2-2. The AP-42 control efficiency was adjusted from 91% to 85% to best reflect the effectiveness of controls employed at this facility. It was conservatively assumed that emissions of $TSP=PM_{10}=PM_{2.5}$. A safety factor of 25% was included to account for any variation in the amount of material being processed by the screens.

HAUL ROADS (HAUL)

Material is hauled into the facility to be processed and the processed material is hauled off-site. The haul road emission factors are from AP-42 Section 13.2. The roads will be watered to help control dust emissions. The road watering will provide a 60% reduction of emissions based on NMED Guidance for Aggregate Handling, Storage Piles, and Haul Road Emissions document, January 1, 2017. The haul road emissions calculated include both light vehicle traffic and heavy vehicle traffic.

WORKING STOCKPILES (STCKPLEWORK)

Emissions from the working stockpiles take into account emissions from moving material between different stockpiles located at the facility. Initial material is placed in a dedicated stockpile. Material from this stockpile is transported using a front end loader and taken to one of the screening units. The material is continually screened until the majority of debris has been removed. Then the clean dirt is transferred to a stockpile and the debris is taken to a separate stockpile. For each unloading of the material, emissions were calculated using data collected onsite by ABCWUA and AP-42 Section 13.2.

3. PROCESS FLOW DIAGRAM

The facility process flow diagram is attached.

Albuquerque Bernalillo County Water Utility Authority (ABCWUA)

North Valley Stockpile Site

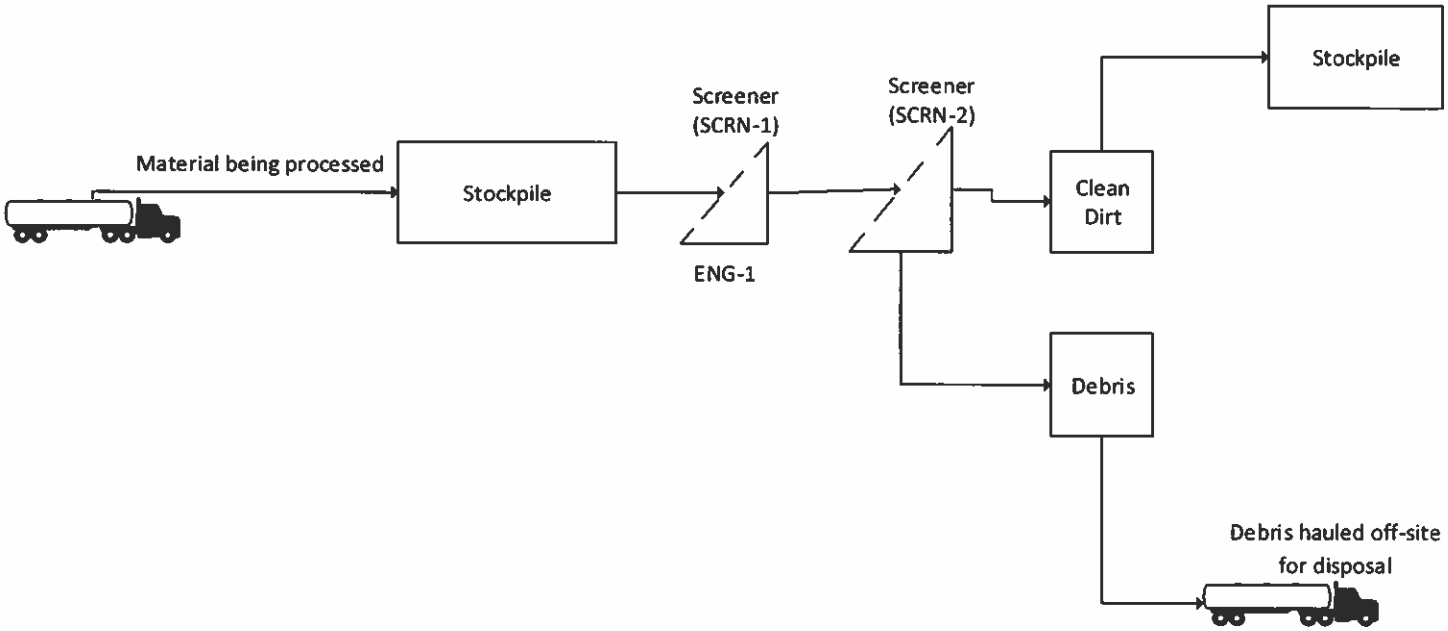

4. FACILITY MAP

A facility map is attached.

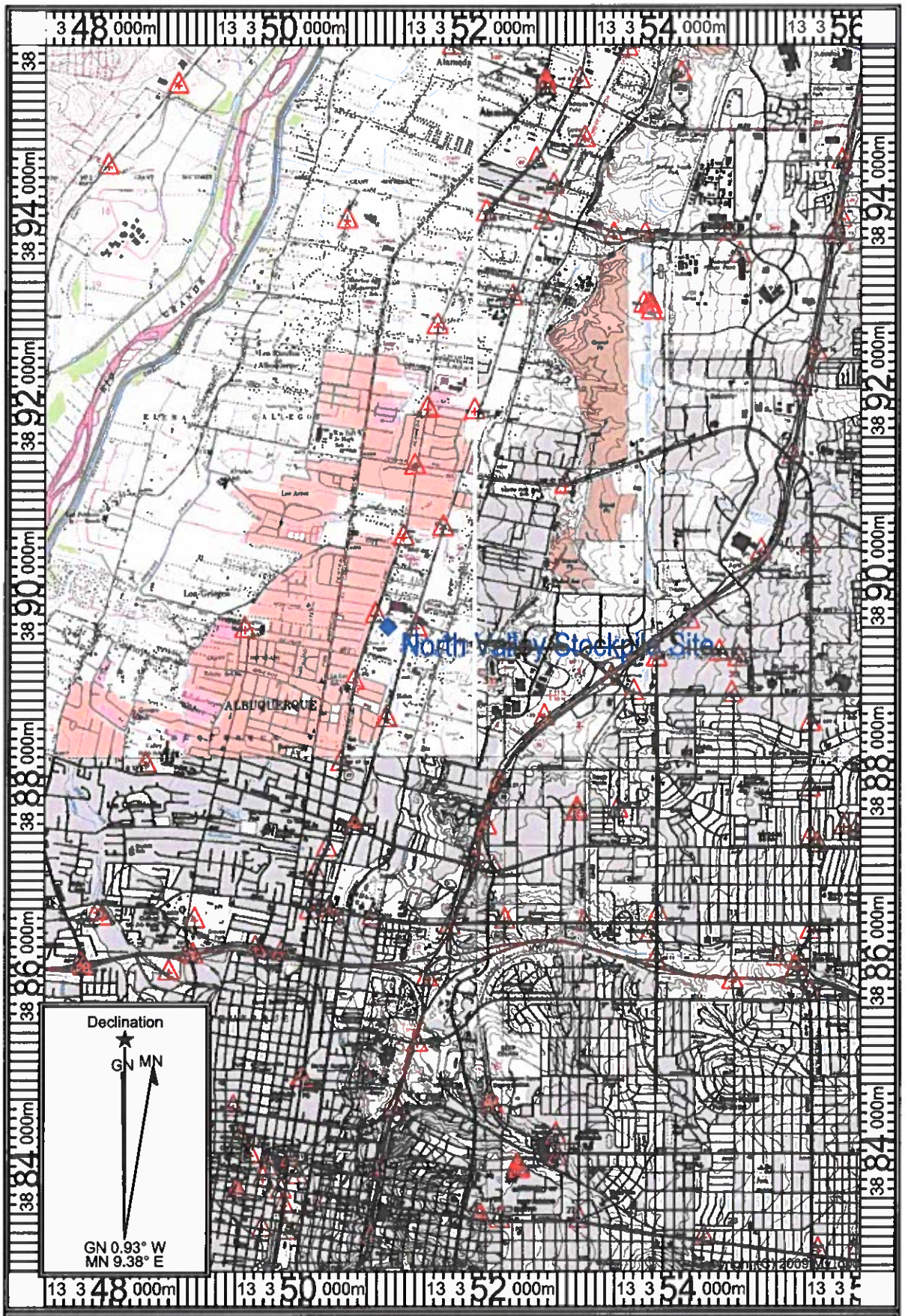

Map Name: LOS GRIEGOS
Print Date: 05/12/17

Scale: 1 inch = 4,761 ft.
Map Center: 13 0351699 E 38891

Horizontal Datum: WGS84

5. EMISSION CALCULATIONS

See the attached emission calculations.

Albuquerque Bernalillo County Water Utility Authority

Emission Summary - North Valley Stockpile Site

Emission Unit: All

Source Description: ABCWUA - North Valley Stockpile Site

Maximum Uncontrolled Emissions																
Unit	NO_x		CO		VOCs		SO_x		TSP		PM_{10}		$PM_{2.5}$		Total HAPs	
	lb/hr	tpy	lb/hr	tpy	lb/hr	tpy	lb/hr	tpy	lb/hr	tpy	lb/hr	tpy	lb/hr	tpy	lb/hr	tpy
ENG-1	1.0	4.6	0.46	2.0	0.17	0.76	0.14	0.62	0.15	0.66	0.15	0.66	0.15	0.66	0.0018	0.0079
SCRN-1	-	-	-	-	-	-	-	-	4.7	20.5	1.63	7.1	0.107	0.47	-	-
SCRN-2	-	-	-	-	-	-	-	-	4.7	20.5	1.63	7.1	0.107	0.5	-	-
HAUL	-	-	-	-	-	-	-	-	1.1	3.8	0.27	0.96	0.027	0.096	-	-
STCKPLEWORK	-	-	-	-	-	-	-	-	0.25	1.08	0.117	0.51	0.0177	0.077	-	-
Totals	1.0	4.6	0.46	2.0	0.17	0.76	0.14	0.62	10.8	46.6	3.8	16.4	0.41	1.8	0.0018	0.0079

"-" Indicates emissions of this pollutant are not expected

Maximum Controlled Emissions																
Unit	NO_x		CO		VOCs		SO_x		TSP		PM_{10}		$PM_{2.5}$		Total HAPs	
	lb/hr	tpy	lb/hr	tpy	lb/hr	tpy	lb/hr	tpy	lb/hr	tpy	lb/hr	tpy	lb/hr	tpy	lb/hr	tpy
ENG-1	1.0	1.3	0.46	0.57	0.17	0.22	0.14	0.18	0.15	0.19	0.15	0.19	0.15	0.19	0.0018	0.0023
SCRN-1	-	-	-	-	-	-	-	-	0.25	0.31	0.088	0.109	0.0057	0.0071	-	-
SCRN-2	-	-	-	-	-	-	-	-	0.14	0.18	0.050	0.063	0.0033	0.0041	-	-
HAUL	-	-	-	-	-	-	-	-	0.42	1.5	0.11	0.38	0.011	0.038	-	-
STCKPLEWORK	-	-	-	-	-	-	-	-	0.095	0.12	0.045	0.056	0.0068	0.0085	-	-
Totals	1.0	1.3	0.46	0.57	0.17	0.22	0.14	0.18	1.1	2.3	0.44	0.80	0.18	0.25	0.0018	0.0023

"-" Indicates emissions of this pollutant are not expected

Albuquerque Bernalillo County Water Utility Authority

North Valley Stockpile Inputs

Diesel Screening Engine (Unit ENG-1)

Data	Value
Actual Engine HP	55
Potential Operation Hours	8760
Actual Operation Hours	2496

Screening and Drop Points

Site Collected Data	Value
Potential Operation Hours	8760
Actual Operation Hours	2496

Haul Roads

Data	Value
Heavy Vehicle Trips	2398
Light Vehicle Trips	2283
Total Vehicle Trips	4681

Albuquerque Bernalillo County Water Utility Authority

Engine Emissions - North Valley Stockpile Site

Emission Unit: ENG-1

Source Description: Screening Engine (Diesel)

Uncontrolled Emissions									
Unit	Pollutant	Emission Factors lb/Hp-hr	Actual Engine Hp	Emissions In Pounds Per Hour	Emissions In Pounds Per Hour[5]	Potential Operating Hours Per Year	Pounds Per Ton	Emissions In Tons Per Year	Emissions In Tons Per Year[5]
Portable Screening Engine	CO[1]	6.68E-03	55	0.37	0.46	8,760	2,000	1.6	2.0
	NO_x[2]	1.51E-02		0.83	1.0			3.6	4.6
	SO_x[1]	2.05E-03		0.11	0.14			0.49	0.62
	PM[1]	2.20E-03		0.12	0.15			0.53	0.66
	TOC[3]	2.51E-03		0.14	0.17			0.61	0.76
	Benzene[4]	6.53E-06		3.6E-04	4.5E-04			1.6E-03	2.0E-03
	Toluene[4]	2.86E-06		1.6E-04	2.0E-04			6.9E-04	8.6E-04
	Xylene[4]	2.00E-06		1.1E-04	1.4E-04			4.8E-04	6.0E-04
	Acetaldehyde[4]	5.37E-06		3.0E-04	3.7E-04			1.3E-03	1.6E-03
	Acrolein[4]	6.48E-07		3.6E-05	4.5E-05			1.6E-04	1.9E-04
	Formaldehyde[4]	8.26E-06		4.5E-04	5.7E-04			2.0E-03	2.5E-03
	Naphthalene[4]	5.94E-07		3.3E-05	4.1E-05			1.4E-04	1.8E-04

Controlled Emissions									
Unit	Pollutant	Emission Factors lb/Hp-hr	Actual Engine Hp	Emissions In Pounds Per Hour	Emissions In Pounds Per Hour[5]	Requested Operating Hours Per Year	Pounds Per Ton	Emissions In Tons Per Year	Emissions In Tons Per Year[5]
Portable Screening Engine	CO[1]	6.68E-03	55	0.37	0.46	2,496	2,000	0.46	0.57
	NO_x[2]	1.51E-02		0.83	1.0			1.04	1.3
	SO_x[1]	2.05E-03		0.11	0.14			0.14	0.18
	PM[1]	2.20E-03		0.12	0.15			0.15	0.19
	TOC[3]	2.51E-03		0.14	0.17			0.17	0.22
	Benzene[4]	6.53E-06		3.6E-04	4.5E-04			4.5E-04	5.6E-04
	Toluene[4]	2.86E-06		1.6E-04	2.0E-04			2.0E-04	2.5E-04
	Xylene[4]	2.00E-06		1.1E-04	1.4E-04			1.4E-04	1.7E-04
	Acetaldehyde[4]	5.37E-06		3.0E-04	3.7E-04			3.7E-04	4.6E-04
	Acrolein[4]	6.48E-07		3.6E-05	4.5E-05			4.4E-05	5.6E-05
	Formaldehyde[4]	8.26E-06		4.5E-04	5.7E-04			5.7E-04	7.1E-04
	Naphthalene[4]	5.94E-07		3.3E-05	4.1E-05			4.1E-05	5.1E-05

[1] Emission factors for CO, SO_2, and PM are from AP-42 Section3, Table 3.3-1.

[2] Emission factor for NO_x based on EPA Tier 1 standards.

[3] Emission factor for TOC is determined by adding the exhaust and crankcase TOC emission factors from AP-42 Section 3.3, Table 3.3-1.

[4] HAP emission factors are from AP-42 Section 3, Table 3.3-2.

[5] A safety factor of 25% has been added to the emissions.

Albuquerque Bernalillo County Water Utility Authority

Screening Emissions - North Valley Stockpile Site

Emission Unit: SCRN-1, SCRN-2
Source Description: Screening Units

	Vibrating Screen	Non-Vibrating Screen
Screen Brand:	CEC	Condore
Screen Model:	Box-It 710	9' x 15'
Screen Mfr. Date:	7/27/2005	-

Site Collected Data[1]	Minimum	Maximum	Average
Number of Loads from Spoils Pile (per hour)	6	12	9
Size of Loading Bucket (yd^3)	3		
Static Screening Use (per hour)	5	10	8
Time of Load through Static Screen (seconds)	15	35	25
Vibratory Screening Use (per hour)	10	18	14
Time of Load through Vibratory Screen (seconds)	25	80	53
Time Spent Using equipment other than the Loaders (minutes/hour)	0	20	10
Number of Dump Trucks (per hour)	0	5	3

Uncontrolled Emissions (PER)

Unit	Pollutant[3]	Emission Factor (lb/Ton)[2]	Production Rate (Ton/hr)	Emissions Rate (lb/hr)	Emissions Rate (lb/hr)[4]	Annual Operations (Hrs/yr)	Annual Emissions (Tons/Yr)	Annual Emissions (Tons/Yr)[4]
SCRN-1 (vibrating Screen)	TSP	0.025	150.0	3.750	4.688	8,760	16.43	20.53
SCRN-2 (non-vibrating Screen)	TSP	0.025	150.0	3.750	4.688	8,760	16.43	20.53
SCRN-1 (vibrating Screen)	PM_{10}	0.0087	150.0	1.305	1.631	8,760	5.72	7.14
SCRN-2 (non-vibrating Screen)	PM_{10}	0.0087	150.0	1.305	1.631	8,760	5.72	7.14
SCRN-1 (vibrating Screen)	$PM_{2.5}$	0.00057	150.0	0.0852	0.1065	8,760	0.373	0.467
SCRN-2 (non-vibrating Screen)	$PM_{2.5}$	0.00057	150.0	0.0852	0.1065	8,760	0.373	0.467

Controlled Emissions (PTE)[5]

Unit	Pollutant[3]	Emission Factor (lb/Ton)[2]	Production Rate (Ton/hr)	Emissions Rate (lb/hr)	Emissions Rate (lb/hr)[4]	Annual Operations (Hrs/yr)	Annual Emissions (Tons/Yr)	Annual Emissions (Tons/Yr)[4]
SCRN-1 (vibrating Screen)	TSP	0.00375	53.8	0.202	0.252	2,496	0.252	0.31
SCRN-2 (non-vibrating Screen)	TSP	0.00375	30.7	0.115	0.144	2,496	0.144	0.18
SCRN-1 (vibrating Screen)	PM_{10}	0.0013	53.8	0.070	0.088	2,496	0.088	0.109
SCRN-2 (non-vibrating Screen)	PM_{10}	0.0013	30.7	0.040	0.050	2,496	0.050	0.063
SCRN-1 (vibrating Screen)	$PM_{2.5}$	0.00009	53.8	0.0046	0.0057	2,496	0.0057	0.0071
SCRN-2 (non-vibrating Screen)	$PM_{2.5}$	0.00009	30.7	0.00262	0.0033	2,496	0.00327	0.0041

[1] Data was collected onsite by ABCWUA.
[2] Screening emission factor is from AP-42 Section 11.19.2, Table 11.19.2-2. The AP-42 control efficiency was adjusted from 91% to 85% to best reflect the effectiveness of controls employed at this facility.
[3] Assumed $PM_{2.5}$=PM_{10}=$PM_{2.5}$.
[4] A safety factor of 25% has been added to the emissions.
[5] Controlled emissions are based on a reduced number of hours.

Albuquerque Bernalillo County Water Utility Authority

Working Stockpile Emissions - North Valley Stockpile Site

Emission Unit: STCKPLEWORK

Source Description: Working Stockpile at Drop Points 1, 2A, 2B, 3A and 3B

Site Collected Data[1]	Minimum	Maximum	Average
Number of Loads from Spoils Pile (per hour)	6	12	9
Size of Loading Bucket (yd^3)		3	
Static Screening Use (per hour)	5	10	8
Time of Load through Static Screen (seconds)	15	35	25
Vibratory Screening Use (per hour)	10	18	14
Time of Load through Vibratory Screen (seconds)	25	80	53
Time Spent Using equipment other than the Loaders (minutes/hour)	0	20	10
Number of Dump Trucks (per hour)	0	5	3

Average Wind Speed (m/s)[2] 6.7

Moisture Content of Dirt (%)[3] 12

Maximum Truck Load Weight (tons) 20

Dump Trucks Unloading onto Raw Spoils Pile (Drop Point 1)

Uncontrolled Emissions (PER)								
PM Size	k[4]	Max Dump Trucks per Hour	Emission Factor (lb/ton)[5]	Emission Rate (lb/hr)	Annual Operations (Hrs/yr)	Emission Rate (tons/yr)	Emission Rate incl S.F.[6] (lb/hr)	Emission Rate incl. S.F.[6] (tons/yr)
TSP	0.74	5	2.82E-04	2.82E-02	8760	1.24E-01	3.52E-02	1.54E-01
PM_{10}	0.35	5	1.33E-04	1.33E-02	8760	5.84E-02	1.67E-02	7.30E-02
$PM_{2.5}$	0.053	5	2.02E-05	2.02E-03	8760	8.85E-03	2.52E-03	1.11E-02

Loader Unloading onto SCRN-1 (Drop Point 2A)

Uncontrolled Emissions (PER)								
PM Size	k[4]	Screen Production Rate (Ton/hr)	Emission Factor (lb/ton)[5]	Emission Rate (lb/hr)	Annual Operations (Hrs/yr)	Emission Rate (tons/yr)	Emission Rate incl S.F.[6] (lb/hr)	Emission Rate incl. S.F.[6] (tons/yr)
TSP	0.74	150.0	2.82E-04	4.23E-02	8760	1.85E-01	5.29E-02	2.32E-01
PM_{10}	0.35	150.0	1.33E-04	2.00E-02	8760	8.76E-02	2.50E-02	1.10E-01
$PM_{2.5}$	0.053	150.0	2.02E-05	3.03E-03	8760	1.33E-02	3.79E-03	1.66E-02

Loader Unloading onto SCRN-2 (Drop Point 2B)

Uncontrolled Emissions (PER)								
PM Size	k[4]	Screen Production Rate (Ton/hr)	Emission Factor (lb/ton)[5]	Emission Rate (lb/hr)	Annual Operations (Hrs/yr)	Emission Rate (tons/yr)	Emission Rate incl S.F.[6] (lb/hr)	Emission Rate incl. S.F.[6] (tons/yr)
TSP	0.74	150.0	2.82E-04	4.23E-02	8760	1.85E-01	5.29E-02	2.32E-01
PM_{10}	0.35	150.0	1.33E-04	2.00E-02	8760	8.76E-02	2.50E-02	1.10E-01
$PM_{2.5}$	0.053	150.0	2.02E-05	3.03E-03	8760	1.33E-02	3.79E-03	1.66E-02

Loader Unloading Material from both SCRN-1 and SCRN-2 (Drop Points 2A and 2B) onto either Clean Fill (Drop Point 3A) or Inert Debris Pile (Drop Points 3B).[7]

Uncontrolled Emissions (PER)								
PM Size	k[4]	Total Screen Production Rate (Ton/hr)	Emission Factor (lb/ton)[5]	Emission Rate (lb/hr)	Annual Operations (Hrs/yr)	Emission Rate (tons/yr)	Emission Rate incl S.F.[6] (lb/hr)	Emission Rate incl. S.F.[6] (tons/yr)
TSP	0.74	300.0	2.82E-04	8.46E-02	8760	3.71E-01	1.06E-01	4.63E-01
PM_{10}	0.35	300.0	1.33E-04	4.00E-02	8760	1.75E-01	5.00E-02	2.19E-01
$PM_{2.5}$	0.053	300.0	2.02E-05	6.06E-03	8760	2.65E-02	7.57E-03	3.32E-02

Uncontrolled Emission Totals (PER)						
Drop Point	Emission Rate incl S.F. [6](lb/hr)			Emission Rate incl. S.F. [6](tons/yr)		
	TSP	PM_{10}	$PM_{2.5}$	TSP	PM_{10}	$PM_{2.5}$
Drop Point 1	3.52E-02	1.67E-02	2.52E-03	1.54E-01	7.30E-02	1.11E-02
Drop Point 2A	5.29E-02	2.50E-02	3.79E-03	2.32E-01	1.10E-01	1.66E-02
Drop Point 2B	5.29E-02	2.50E-02	3.79E-03	2.32E-01	1.10E-01	1.66E-02
Drop Point 3A & 3B	1.06E-01	5.00E-02	7.57E-03	4.63E-01	2.19E-01	3.32E-02
Total	0.247	0.117	0.0177	1.08	0.51	0.077

Dump Trucks Unloading onto Raw Spoils Pile (Drop Point 1)

Controlled Emissions (PTE) [6]								
PM Size	k[4]	Max Dump Trucks per Hour	Emission Factor (lb/ton) [5]	Emission Rate (lb/hr)	Annual Operations (Hrs/yr)	Emission Rate (tons/yr)	Emission Rate incl S.F. [6](lb/hr)	Emission Rate incl. S.F. [6](tons/yr)
TSP	0.74	5	2.82E-04	2.82E-02	2496	3.52E-02	3.52E-02	4.40E-02
PM_{10}	0.35	5	1.33E-04	1.33E-02	2496	1.66E-02	1.67E-02	2.08E-02
$PM_{2.5}$	0.053	5	2.02E-05	2.02E-03	2496	2.52E-03	2.52E-03	3.15E-03

Loader Unloading onto SCRN-1 (Drop Point 2A)

Controlled Emissions (PTE) [6]								
PM Size	k[4]	Screen Production Rate (Ton/hr)	Emission Factor (lb/ton) [5]	Emission Rate (lb/hr)	Annual Operations (Hrs/yr)	Emission Rate (tons/yr)	Emission Rate incl S.F. [6](lb/hr)	Emission Rate incl. S.F. [6](tons/yr)
TSP	0.74	53.8	2.82E-04	1.52E-02	2496	1.89E-02	1.89E-02	2.36E-02
PM_{10}	0.35	53.8	1.33E-04	7.17E-03	2496	8.95E-03	8.96E-03	1.12E-02
$PM_{2.5}$	0.053	53.8	2.02E-05	1.09E-03	2496	1.35E-03	1.36E-03	1.69E-03

Loader Unloading onto SCRN-2 (Drop Point 2B)

Controlled Emissions (PTE) [6]								
PM Size	k[4]	Screen Production Rate (Ton/hr)	Emission Factor (lb/ton) [5]	Emission Rate (lb/hr)	Annual Operations (Hrs/yr)	Emission Rate (tons/yr)	Emission Rate incl S.F. [6](lb/hr)	Emission Rate incl. S.F. [6](tons/yr)
TSP	0.74	30.7	2.82E-04	8.66E-03	2496	1.08E-02	1.08E-02	1.35E-02
PM_{10}	0.35	30.7	1.33E-04	4.10E-03	2496	5.11E-03	5.12E-03	6.39E-03
$PM_{2.5}$	0.053	30.7	2.02E-05	6.20E-04	2496	7.74E-04	7.75E-04	9.68E-04

Loader Unloading Material from both SCRN-1 and SCRN-2 (Drop Points 2A and 2B) onto either Clean Fill (Drop Point 3A) or Inert Debris Pile (Drop Points 3B).

Controlled Emissions (PTE) [6]								
PM Size	k[4]	Total Screen Production Rate (Ton/hr)	Emission Factor (lb/ton) [5]	Emission Rate (lb/hr)	Annual Operations (Hrs/yr)	Emission Rate (tons/yr)	Emission Rate incl S.F. [6](lb/hr)	Emission Rate incl. S.F. [6](tons/yr)
TSP	0.74	84.5	2.82E-04	2.38E-02	2496	2.97E-02	2.98E-02	3.72E-02
PM_{10}	0.35	84.5	1.33E-04	1.13E-02	2496	1.41E-02	1.41E-02	1.76E-02
$PM_{2.5}$	0.053	84.5	2.02E-05	1.71E-03	2496	2.13E-03	2.13E-03	2.66E-03

Controlled Emission Totals (PTE) [6]						
Drop Point	Emission Rate incl S.F. [6] (lb/hr)			Emission Rate incl. S.F. [6] (tons/yr)		
	TSP	PM_{10}	$PM_{2.5}$	TSP	PM_{10}	$PM_{2.5}$
Drop Point 1	3.52E-02	1.67E-02	2.52E-03	4.40E-02	2.08E-02	3.15E-03
Drop Point 2A	1.89E-02	8.96E-03	1.36E-03	2.36E-02	1.12E-02	1.69E-03
Drop Point 2B	1.08E-02	5.12E-03	7.75E-04	1.35E-02	6.39E-03	9.68E-04
Drop Point 3A & 3B	2.98E-02	1.41E-02	2.13E-03	3.72E-02	1.76E-02	2.66E-03
Total	0.095	0.045	0.0068	0.118	0.056	0.0085

[1] Data was collected onsite by ABCWUA.

[2] Conservatively the maximum average windspeed was taken from AP-42 Section 13.2.4.3.

[3] Moisture content is relatively high as dirt/debris arrives wet at the stockpile due to its removal from excavation areas around leaking water pipes. Moisture content taken from AP-42 Table 13.2.4-1 for "Cover Dirt".

[4] k is taken from AP-42 Section 13.2.4.3.

[5] Using Equation 1 from AP-42 Section 13.2.4.3.

[6] A safety factor of 25% has been added to the emissions.

[7] Conservatively assume that the total production rate of SCRN-1 and SCRN-2 are entirely moved to Clean Fill or Inert Debris after one Screener pass instead of recycling through the Screeners.

[8] Controlled emissions are based on a reduced number of hours.

$$E = k(0.0032)\ \frac{\left(\frac{U}{5}\right)^{1.3}}{\left(\frac{M}{2}\right)^{1.4}}\ \text{(pound [lb]/ton)}$$

6. AIR DISPERSION MODELING

See attached modeling waiver.

Albuquerque Bernalillo County Water Utility Authority

Haul Road Emissions - North Valley Stockpile Site

Emission Unit:	HAUL
Source Description:	Fugitive Dust Generated by Truck Traffic

Heavy Vehicle Trips (per year)	2398
Light Vehicle Trips (per year)	2283
Total Trips (per year)	4681
Trip Distance (miles)	0.25
Trip Distance with 50% Safety Factor (miles)	0.38
Vehicle Miles (per year)	1755.4
Road Watering Control (%)[9]	60

Unpaved Road Emission Factors

Route	Calculation Parameters[1]												Hourly Emission Factors			Annual Emission Factors		
	s	W	P	k			a			b			E^4			E_{ext}^7		
	Silt Content[2]	Mean Vehicle Weight	Wet Days[3]	PM_{30}	PM_{10}	$PM_{2.5}$	PM_{30}	PM_{10}	$PM_{2.5}$	PM_{30}	PM_{10}	$PM_{2.5}$	PM_{30}[6]	PM_{10}	$PM_{2.5}$	PM_{30}	PM_{10}	$PM_{2.5}$
	%	tons	day	lb/VMT	lb/VMT	lb/VMT							lb/VMT	lb/VMT	lb/VMT	lb/VMT	lb/VMT	lb/VMT
Light Vehicle Traffic	4.8	6.8	70	4.9	1.5	0.15	0.70	0.90	0.90	0.45	0.45	0.45	3.7	0.95	0.095	3.0	0.77	0.077
Heavy Vehicle Traffic		25.9		4.9	1.5	0.15	0.70	0.90	0.90	0.45	0.45	0.45	6.8	1.7	0.17	5.5	1.4	0.14

Unpaved Road Emissions

Route	Calculation Inputs						Uncontrolled Emissions						Controlled Emissions[8]					
	Annual Operation	Segment Length	Trips per Segment	Number of Trucks per Year	Effective Segment Length	Average VMT/yr[5]	PM_{30}		PM_{10}		$PM_{2.5}$		PM_{30}		PM_{10}		$PM_{2.5}$	
	hr	mi		trucks/yr	mi	mi/yr	lb/hr	tpy	lb/hr	tpy	lb/hr	tpy	lb/hr	tpy	lb/hr	tpy	lb/hr	tpy
Light Vehicle Traffic	8,760	0.38	1	2283	0.38	856	0.36	1.3	0.093	0.33	0.0093	0.033	0.15	0.51	0.037	0.13	0.0037	0.013
Heavy Vehicle Traffic				2398	0.38	899	0.70	2.5	0.18	0.63	0.018	0.063	0.28	0.99	0.071	0.25	0.0071	0.025
						Totals	***1.1***	***3.8***	***0.27***	***0.96***	***0.027***	***0.096***	***0.42***	***1.5***	***0.11***	***0.38***	***0.011***	***0.038***

[1] Emission factors calculated per AP-42 Sec. 13.2.2.3 November, 2006, Equation 2.

[2] Surface silt = % of 75 micron diameter and smaller particles

[3] 70 rain days per year was used as a conservative measure from the contour map in Section 13.2.

[4] E = k x (s/12)^a x (W/3)^b (AP-42 page 13.2.2-4 Equation 1a, November 2006)

E = Size Specific Emission Factor (lb/VMT)

s = surface material silt content (%)

k, a, b = constants from AP-42 Table 13.2.2-2

W = Weighted Mean Vehicle Weight from Haul Road Inputs (tons)

[5] PM30 emission factor in equation is assumed as a surrogate for TSP emissions

[6] VMT/yr = Vehicle Miles Travelled per year= Trips per year * Segment Length

[7] Wet Day Emission Factor = E * (365 - Wet Days)/365. Wet days value is the NM default allowed by NMED without additional justification.

[8] Controlled Emissions = Uncontrolled Emissions * (1 - Control Factor/100%)

[9] 60% safety factor comes from NMED Guidance for Aggregate Handling, Storage Piles, and Haul Road Emissions document, January 1, 2017.

Control Efficiency = 60%

9400 Holly Avenue NE | Bldg 3, Suite 300 | Albuquerque, NM 87122 | P (505) 266-6611
trinityconsultants.com

Trinity Consultants

May 14, 2019

Mr. Isreal Tavarez
Environmental Health Manager
Air Quality Program (AQP)
Environmental Health Department
PO Box 1293
Albuquerque, NM 87103

Re: Construction Permit #3278, ABCWUA – North Valley Stockpile Site Modeling Waiver

Dear Mr. Tavarez,

On behalf of Albuquerque Bernalillo County Water Utility Authority (ABCWUA), we are formally requesting a modeling waiver for the permit modification to Construction Permit #3278. Ms. Corina G. Munoz-Dyer addressed a letter to ABCWUA and Dr. Andrew Glen (Trinity Consultants) on February 14, 2019 detailing the administrative revision request and recommended modifications to the North Valley Stockpile Site. In Ms. Munoz-Dyer's letter, she states the following:

> AQP also consulted with Mr. Jeff Stonesifer regarding the impact the increase in the hourly and annual emissions from the screens would have in the air dispersion model submitted by ABCWUA. Mr. Stonesifer, explained that a conservative approach would be to assume that the percent increase in the modeled emissions would be the same to the percent increase of the hourly and annual emissions from the screens using the weight/volume ratio of 1.28 tons /cy. Therefore, using a weight/volume ratio of 1.28 tons/cy will not have affect the modeled impact emissions significantly and a new air dispersion model is not recommended at this time.

Therefore, we would like to request a modeling waiver on these grounds provided by Mr. Jeff Stonesifer and Mrs. Corina G. Munoz-Dyer.

If you have any related questions or suggestions, please contact Andrew Glen by phone at Trinity's Albuquerque office at (505) 266-6611.

Thank you for your assistance,

TRINITY CONSULTANTS

Andrew Glen

Andrew Glen, PhD
Managing Consultant

Cc: Mr. Joel Berman, Chief Engineer for the ABCWUA

7. PUBLIC NOTICE

See the attached public notice.

Notice of Intent to Construct

Under 20.11.41.13B NMAC, the owner/operator is required to *provide public notice by certified mail or electronic mail to the designated representative(s) of the recognized neighborhood associations and recognized coalitions that are with-in one-half mile of the exterior boundaries of the property on which the source is or is proposed to be located* if they propose to construct or establish a new facility or make modifications to an existing facility that is subject to 20.11.41 NMAC – Construction Permits. **A copy of this form must be included with the application.**

Applicant's Name and Address: Albuquerque Bernalillo County Water Utility Authority (Water Authority) North Valley Stockpile Site, 5408 2nd Street NW, Albuquerque, NM 87103

Owner / Operator's Name and Address: Albuquerque Bernalillo County Water Utility Authority (Water Authority), P.O. Box 568, Albuquerque, NM 87103

Actual or Estimated Date the Application will be submitted to the Department: May 10, 2019

Exact Location of the Source or Proposed Source: North Valley Stockpile Site – 5408 2nd Street NW, Albuquerque, NM 87103

Description of the Source: Construction and demolition (C&D) debris from utility excavation projects.

Nature of the Business: C&D debris processing and disposal. Debris from utility repair and construction projects is hauled to this site, where it is mechanically screened to separate soil from other waste materials such as asphalt, concrete and metal. The soil is then stockpiled for use as backfill material for other excavations, and the other waste components are sent for recycling.

Process or Change for which the permit is requested:
This modification seeks to change operating hours from 2,080 hours per year to 2,496 hours per year, and change the calculation methodology of emissions.

Preliminary Estimate of the Maximum Quantities of each regulated air contaminant the source will emit:

Initial Construction Permit

	Pounds Per Hour (lbs/hr)	Tons Per Year (tpy)
CO	0.46	0.48
NOx	1.0	1.1
NOx + NMHC	--	--
VOC	0.17	0.18
SO_2	0.14	0.15
TSP	0.87	1.98
PM10	0.37	0.66
PM2.5	0.17	0.21
VHAP	--	--

Net Changes In Emissions

(Only for permit Modifications or Technical Revisions)

	lbs/hr	tpy	Estimated Total TPY
CO	0.0	+0.09	0.57
NOx	0.0	+0.2	1.3
NOx + NMHC	--	--	--
VOC	0.0	+0.04	0.22
SO_2	0.0	+0.03	0.18
TSP	+0.23	+0.33	2.3
PM10	+0.067	+0.14	0.80
PM2.5	+0.0087	+0.042	0.25
VHAP	--	--	--

Ver.10/16

Maximum Operating Schedule: 8 hrs/day, 5 days/week, 52 weeks/year
Normal Operating Schedule: 6 am to 6 pm, 4 days/week
Current Contact Information for Comments and Inquires:

Name: Joel Berman
Address: 5408 2nd Street NW, Albuquerque, NM 87103
Phone Number: (505) 289-3524
E-Mail Address: JBerman@abcwua.org

If you have any comments about the construction or operation of the above facility, and you want your comments to be made as part of the permit review process, you must submit your comments in writing to the address below:

Environmental Health Manager
Stationary Source Permitting
Albuquerque Environmental Health Department
Air Quality Program
PO Box 1293
Albuquerque, New Mexico 87103
(505) 768-1972

Other comments and questions may be submitted verbally.

Please refer to the company name and facility name, as used in this notice or send a copy of this notice along with your comments, since the Department may not have received the permit application at the time of this notice. Please include a legible mailing address with your comments. Once the Department has performed a preliminary review of the application and its air quality impacts, if required, the Department's notice will be published in the legal section of the Albuquerque Journal and mailed to neighborhood associations and neighborhood coalitions near the facility location or near the facility proposed location.

City of Albuquerque

Environmental Health Department
Air Quality Program

Public Notice Sign Guidelines

Any person seeking a permit under 20.11.41 NMAC, Authority-to-Construct Permits, shall do so by filing a written application with the Department. *Prior to submitting an application, the applicant shall post and maintain a weather-proof sign provided by the department. The applicant shall keep the sign posted until the department takes final action on the permit application; if an applicant can establish to the department's satisfaction that the applicant is prohibited by law from posting, at either location required, the department may waive the posting requirement and may impose different notification requirements.* **A copy of this form must be submitted with your application.**

Applications that are ruled incomplete because of missing information will delay any determination or the issuance of the permit. The Department reserves the right to request additional relevant information prior to ruling the application complete in accordance with 20.11.41 NMAC.

Name: North Valley Stockpile Site
Contact: Joel Berman, (505) 289-3524
Company/Business: Albuquerque Bernalillo County Water Utility Authority / Water and wastewater services

☐ ☑ The sign must be posted at the more visible of either the proposed or existing facility entrance (or, if approved in advance and in writing by the department, at another location on the property that is accessible to the public)

- ☐ ☑ The sign shall be installed and maintained in a condition such that members of the public can easily view, access, and read the sign at all times.
- ☐ ☑ The lower edge of the sign board should be mounted a minimum of 2' above the existing ground surface to facilitate ease of viewing

☐ ☑ Attach a picture of the completed, properly posted sign to this document

☐ ☐ **Check here if the department has waived the sign posting requirement.**
Alternative public notice details:

Ver. 11/13


NOTICE
NO UNAUTHORIZED
PERSONS ALLOWED
BEYOND THIS POINT
WARNING
NO
TRESPASSING
TAMPERING WITH
THIS FACILITY IS A
FEDERAL OFFENSE!

Tim Keller, Mayor

Environmental Health Department

Air Quality Program

Interoffice Memorandum

Sandra K. Begay, Director

TO: MACKENZIE PRICE, TRINITY CONSULTANTS

FROM: REGAN EYERMAN, SENIOR ENVIRONMENTAL HEALTH SCIENTIST

SUBJECT: DETERMINATION OF NEIGHBORHOOD ASSOCIATIONS AND COALITIONS WITHIN 0.5 MILES OF 5408 2ND ST. NW, ALBUQUERQUE, NM 87107

DATE: APRIL 12, 2019

DETERMINATION:

On April 12, 2019 I used the City of Albuquerque Zoning Advanced Map Viewer (http://sharepoint.cabq.gov/gis) to review which City of Albuquerque (COA) Neighborhood Associations (NAs) and Neighborhood Coalitions (NCs) are located within 0.5 miles of 5408 2nd St. NW, Albuquerque in Bernalillo County, NM.

I then used the City of Albuquerque Office of Neighborhood Coordination's Monthly Master NA List dated March 2019 and the Bernalillo County Monthly Neighborhood Association April 2019 Excel file to determine the contact information for each NA and NC located within 0.5 miles of 5408 2nd St. NW, Albuquerque in Bernalillo County, NM.

Duplicates have been deleted:

From http://sharepoint.cabq.gov/gis using the zoning advanced map viewer and the list of NAs and NCs from CABQ Office of Neighborhood Coordination and from County of Bernalillo:

COA Association or Coalition	Name	Email or Mailing Address
District 7 Coalition of N.A.'s	David Haughawout	davidh.d7@comcast.net davidh2420@comcast.net
District 7 Coalition of N.A.'s	Lynne Martin	lmartin900@aol.com
Gavilan Addition N.A.	Connie Romero	aubconjeff@msn.com
Gavilan Addition N.A.	Bret Haskins	bhaskins1@aol.com
Greater Gardener & Monkbridge N.A..	Marcia Finical	marcia_finical@yahoo.com
Greater Gardener & Monkbridge N.A.	David Wood	wood_cpa@msn.com
Greater Gardener & Monkbridge N.A.	N.A. Email	ggnaabq@gmail.com

Los Alamos Addition N.A.	Jeremy Wilcox	jeremyewilcox@gmail.com
Los Alamos Addition N.A.	Don Dudley	don.dudley@dondudleydesign.com
Los Alamos Addition N.A.	N.A. Email	info@abqlaana.org
Los Poblanos N.A.	Don Newman	don.newman@mac.com
Los Poblanos N.A.	Karon Boutz	kjboutz@gmail.com
Los Poblanos N.A.	N.A. Email	admin@lospoblanosna.com
Merritt Acres N.A.	Pauline Rael	merrittacres@comcast.net
Merritt Acres N.A.	Nancy Robinson	n.robinson07@comcast.net
North Edith Corridor Assoc.	Christine Benavidez	christinebnvdz@aol.com
North Edith Corridor Assoc.	Robert Warrick	rlwarric@centurylink.net
North Valley Coalition	Peggy Norton	peggynorton@yahoo.com
North Valley Coalition	Doyle Kimbrough	newmexmba@aol.com
North Valley Coalition	N.A. Email	nvcabq@gmail.com

MacKenzie Price

From: MacKenzie Price
Sent: Thursday, May 02, 2019 11:57 AM
To: 'davidh.d7@comcast.net'; 'davidh2420@comcast.net'; 'lmartin900@aol.com'; 'aubconjeff@msn.com'; 'bhaskins1@aol.com'; 'marcia_finical@yahoo.com'; 'wood_cpa@msn.com'; 'ggnaabq@gmail.com'; 'jeremyewilcox@gmail.com'; 'don.dudley@dondudleydesign.com'; 'info@abqlaana.org'; 'don.newman@mac.com'; 'kjboutz@gmail.com'; 'admin@lospoblanosna.com'; 'merrittacres@comcast.net'; 'n.robinson07@comcast.net'; 'christinebnvdz@aol.com'; 'rlwarric@centurylink.net'; 'peggynorton@yahoo.com'; 'newmexmba@aol.com'; 'nvcabq@gmail.com'
Cc: 'Eyerman, Regan V.'
Subject: 20.11.41 NMAC Required Notice of Intent to Construct
Attachments: North Valley Stockpile Public Notice.pdf

Dear Neighborhood Association/Coalition Representative,

The local air quality Construction Permit regulation 20.11.41 NMAC requires that registered representatives of neighborhood associations and coalitions within a half mile of a facility proposing to apply for an air quality permit application be notified in advance of permit application. Therefore, you are receiving the required attached public notice regarding Albuquerque Bernalillo County Water Utility Authority's North Valley Stockpile Site proposed permit modification. This facility is located at 5408 2nd Street NW, Albuquerque, NM 87103.

Please see the attached *Notice of Intent to Construct* form for more information and directions if you might have related comments or questions.

Thanks,

MacKenzie Price
Associate Consultant

Trinity Consultants
9400 Holly Avenue | Bldg 3 Suite 300 | Albuquerque, NM 87122

Office: 505-266-6611 | Mobile: 307-343-6892
Email: MPrice@TrinityConsultants.com | Website: www.TrinityConsultants.com

8. PERMIT APPLICATION FORMS AND PROOF OF REVIEW FEE PAYMENT

The following permit application forms are attached:

- Application Checklist
- Permit Application Short Form
- Permit Application Review Fee Checklist

Proof of payment of the permit application review fees is included in application.

Table 3.3-1. EMISSION FACTORS FOR UNCONTROLLED GASOLINE AND DIESEL INDUSTRIAL ENGINES[a]

Pollutant	Gasoline Fuel (SCC 2-02-003-01, 2-03-003-01)		Diesel Fuel (SCC 2-02-001-02, 2-03-001-01)		EMISSION FACTOR RATING
	Emission Factor (lb/hp-hr) (power output)	Emission Factor (lb/MMBtu) (fuel input)	Emission Factor (lb/hp-hr) (power output)	Emission Factor (lb/MMBtu) (fuel input)	
NO_x	0.011	1.63	0.031	4.41	D
CO	6.96 E-03[d]	0.99[d]	6.68 E-03	0.95	D
SO_x	5.91 E-04	0.084	2.05 E-03	0.29	D
PM-10[b]	7.21 E-04	0.10	2.20 E-03	0.31	D
CO_2[c]	1.08	154	1.15	164	B
Aldehydes	4.85 E-04	0.07	4.63 E-04	0.07	D
TOC					
Exhaust	0.015	2.10	2.47 E-03	0.35	D
Evaporative	6.61 E-04	0.09	0.00	0.00	E
Crankcase	4.85 E-03	0.69	4.41 E-05	0.01	E
Refueling	1.08 E-03	0.15	0.00	0.00	E

[a] References 2,5-6,9-14. When necessary, an average brake-specific fuel consumption (BSFC) of 7,000 Btu/hp-hr was used to convert from lb/MMBtu to lb/hp-hr. To convert from lb/hp-hr to kg/kw-hr, multiply by 0.608. To convert from lb/MMBtu to ng/J, multiply by 430. SCC = Source Classification Code. TOC = total organic compounds.

[b] PM-10 = particulate matter less than or equal to 10 μm aerodynamic diameter. All particulate is assumed to be ≤ 1 μm in size.

[c] Assumes 99% conversion of carbon in fuel to CO_2 with 87 weight % carbon in diesel, 86 weight % carbon in gasoline, average BSFC of 7,000 Btu/hp-hr, diesel heating value of 19,300 Btu/lb, and gasoline heating value of 20,300 Btu/lb.

[d] Instead of 0.439 lb/hp-hr (power output) and 62.7 lb/mmBtu (fuel input), the correct emissions factors values are 6.96 E-03 lb/hp-hr (power output) and 0.99 lb/mmBtu (fuel input), respectively. This is an editorial correction. March 24, 2009

Table 3.3-2. SPECIATED ORGANIC COMPOUND EMISSION FACTORS FOR UNCONTROLLED DIESEL ENGINES[a]

EMISSION FACTOR RATING: E

Pollutant	Emission Factor (Fuel Input) (lb/MMBtu)
Benzene[b]	9.33 E-04
Toluene[b]	4.09 E-04
Xylenes[b]	2.85 E-04
Propylene	2.58 E-03
1,3-Butadiene[b,c]	<3.91 E-05
Formaldehyde[b]	1.18 E-03
Acetaldehyde[b]	7.67 E-04
Acrolein[b]	<9.25 E-05
Polycyclic aromatic hydrocarbons (PAH)	
Naphthalene[b]	8.48 E-05
Acenaphthylene	<5.06 E-06
Acenaphthene	<1.42 E-06
Fluorene	2.92 E-05
Phenanthrene	2.94 E-05
Anthracene	1.87 E-06
Fluoranthene	7.61 E-06
Pyrene	4.78 E-06
Benzo(a)anthracene	1.68 E-06
Chrysene	3.53 E-07
Benzo(b)fluoranthene	<9.91 E-08
Benzo(k)fluoranthene	<1.55 E-07
Benzo(a)pyrene	<1.88 E-07
Indeno(1,2,3-cd)pyrene	<3.75 E-07
Dibenz(a,h)anthracene	<5.83 E-07
Benzo(g,h,l)perylene	<4.89 E-07
TOTAL PAH	1.68 E-04

[a] Based on the uncontrolled levels of 2 diesel engines from References 6-7. Source Classification Codes 2-02-001-02, 2-03-001-01. To convert from lb/MMBtu to ng/J, multiply by 430.
[b] Hazardous air pollutant listed in the *Clean Air Act*.
[c] Based on data from 1 engine.

California Environmental Protection Agency AIR RESOURCES BOARD	DEUTZ AG	EXECUTIVE ORDER U-R-013-0097 New Off-Road Compression-Ignition Engines

Pursuant to the authority vested in the Air Resources Board by Sections 43013, 43018, 43101, 43102, 43104 and 43105 of the Health and Safety Code; and

Pursuant to the authority vested in the undersigned by Sections 39515 and 39516 of the Health and Safety Code and Executive Order G-02-003;

IT IS ORDERED AND RESOLVED: That the following compression-ignition engines and emission control system produced by the manufacturer are certified as described below for use in off-road equipment. Production engines shall be in all material respects the same as those for which certification is granted.

MODEL YEAR	ENGINE FAMILY	DISPLACEMENT (liters)	FUEL TYPE	USEFUL LIFE (hours)
2003	3DZXL06.1010	3.1, 4.1, 6.1	Diesel	8000

SPECIAL FEATURES & EMISSION CONTROL SYSTEMS	TYPICAL EQUIPMENT APPLICATION
Direct Diesel Injection, Smoke Puff Limiter	Pump, Generator Set, Industrial Equipment

The engine models and codes are attached.

The following are the exhaust certification standards (STD) and certification levels (CERT) for hydrocarbon (HC), oxides of nitrogen (NOx), or non-methane hydrocarbon plus oxides of nitrogen (NMHC+NOx), carbon monoxide (CO), and particulate matter (PM) in grams per kilowatt-hour (g/kw-hr), and the opacity-of-smoke certification standards and certification levels in percent (%) during acceleration (Accel), lugging (Lug), and the peak value from either mode (Peak) for this engine family (Title 13, California Code of Regulations, (13 CCR) Section 2423):

RATED POWER CLASS	EMISSION STANDARD CATEGORY		EXHAUST (g/kw-hr)					OPACITY (%)		
			HC	NOx	NMHC+NOx	CO	PM	ACCEL	LUG	PEAK
37 ≤ kW < 75	Tier 1	STD	N/A	9.2	N/A	N/A	N/A	20	15	50
		CERT	-	8.5	-	-	-	8	6	10

BE IT FURTHER RESOLVED: That for the listed engine models, the manufacturer has submitted the information and materials to demonstrate certification compliance with 13 CCR Section 2424 (emission control labels), and 13 CCR Sections 2425 and 2426 (emission control system warranty).

Engines certified under this Executive Order must conform to all applicable California emission regulations.

This Executive Order is only granted to the engine family and model-year listed above. Engines in this family that are produced for any other model-year are not covered by this Executive Order.

Executed at El Monte, California on this 9TH day of December 2002.

Allen Lyons, Chief
Mobile Source Operations Division

Attachment 1 of 2

Manufacturer: DEUTZ AG
Engine Category: Nonroad CI
EPA Family Name: 3DZXL06.1010
Mfr. Family Name: F3L913
Process Code: New Submission

ENGINE MODEL SUMMARY FORM

U-R-013-0097

1. Engine code	2. Engine Model	3. BHP@	RPM	4. Fuel Rate @ Rated Power (mm3/stroke)	5. Fuel Rate (lbs./hr) Rated Power	6. Peak Torque @ RPM(NM)		7. Peak Torque (mm³/stroke)	8. Fuel Rate (lbs./hr) @ Peak Torque	9. Emission Control Device (SAE J1930)
C37	F3L913	50	2150	55.0	17.4	177	1500	55.0	13.0	EM DOI, SPL
C37/1	F3L913	50	2000	61.0	17.4	184	1500	59.0	13.6	EM
C39	F3L913	52	2300	55.0	18.3	180	1500	56.5	13.3	EM
C39/1	F3L913	52	2150	58.0	18.3	187	1500	58.0	13.8	EM
C41	F3L913	55	2300	59.0	19.2	190	1500	59.5	14.0	EM
C42	F3L913	56	2500	55.5	19.7	191	1500	60.0	14.1	EM
C44	F3L913	59	2500	61.5	20.6	201	1500	65.5	14.8	EM
C44/1	F3L913	59	2400	62.0	20.6	201	1500	65.5	14.8	EM
56/11	F4L913	76	2350	60.0	26.6	265	1500	65.0	19.5	EM
56/11	F4L913	76	2350	60.0	26.6	265	1500	52.0	19.5	EM
C43	F4L913	58	1800	59.0	20.2	252	1500	60.0	18.6	EM
C45	F4L913	60	1900	59.0	21.1	252	1500	60.0	18.6	EM
C46	F4L913	62	1800	64.0	21.6	262	1500	64.0	19.3	EM
C48/1	F4L913	64	2000	60.0	22.5	252	1500	60.0	18.6	EM
C50/1	F4L913	67	2150	57.0	23.5	253	1500	59.0	18.7	EM
C50/2	F4L913	67	2000	63.5	23.5	262	1500	64.0	19.3	EM
C51,5	F4L913	69	2300	56.0	24.2	250	1500	58.0	18.4	EM
C53	F4L913	71	2300	58.0	24.9	257	1500	60	18.9	EM
C53/1	F4L913	71	2150	62.0	24.9	265	1500	64	19.5	EM
C55	F4L913	74	2300	61.0	25.8	266	1500	65	19.6	EM
C56	F4L913	75	2500	58.5	26.3	264	1500	64	19.5	EM
C56/1	F4L913	75	2350	61.0	26.3	268	1500	65.5	19.8	EM
C56/2	F4L913	75	2300	62.0	26.3	270	1500	66	19.9	EM
C59	F4L913	79	2500	63.0	27.7	278	1500	68.5	20.5	EM
C59/1	F4L913	79	2400	63.0	27.7	278	1500	68.5	20.5	EM
D42	F4L913	56	1800	57.0	19.7	N/A	N/A	N/A	N/A	EM
D44	F4L913	59	1800	61.0	20.6	N/A	N/A	N/A	N/A	EM
D47.5	F4L913	64	1800	67.0	22.4	N/A	N/A	N/A	N/A	EM
D46,5	F4L913	62	1800	65.0	21.8	N/A	N/A	N/A	N/A	EM
C69	F6L913	92	1800	59.0	32.4	370	1500	57.5	27.3	EM
C72	F6L913	96	2000	56.0	33.8	374	1500	57.5	27.6	EM
D64	F6L913	86	1800	54.0	30.0	N/A	N/A	N/A	N/A	EM

U-R-013-0097

Manufacturer: DEUTZ AG
Engine Category: Nonroad CI
EPA Family Name: 3DZXL06.1010
Mfr. Family Name: F3L913
Process Code: New Submission

ENGINE MODEL SUMMARY FORM

1. Engine code	2. Engine Model	3. BHP@	RPM	4. Fuel Rate @ Rated Power (mm3/stroke)	5. Fuel Rate (lbs./hr) Rated Power	6. Peak Torque @ RPM(NM)		7. Peak Torque (mm^3/stroke)	8. Fuel Rate (lbs./hr) @ Peak Torque	9. Emission Control Device (SAE J1930)	
D67	F6L913	90	1800	56.0	31.4	N/A	N/A	N/A	N/A	EM	DPF, SPL
D70,5	F6L913	94	1800	60.0	33.1	N/A	N/A	N/A	N/A	EM	↓
C37,2	F4L913	50	1800	50.0	17.4	230	1500	55.0	17.0	EM	

Table 11.19.2-2 (English Units). EMISSION FACTORS FOR CRUSHED STONE PROCESSING OPERATIONS (lb/Ton)[a]

Source [b]	Total Particulate Matter [r,s]	EMISSION FACTOR RATING	Total PM-10	EMISSION FACTOR RATING	Total PM-2.5	EMISSION FACTOR RATING
Primary Crushing (SCC 3-05-020-01)	ND		ND[n]		ND[n]	
Primary Crushing (controlled) (SCC 3-05-020-01)	ND		ND[n]		ND[n]	
Secondary Crushing (SCC 3-05-020-02)	ND		ND[n]		ND[n]	
Secondary Crushing (controlled) (SCC 3-05-020-02)	ND		ND[n]		ND[n]	
Tertiary Crushing (SCC 3-050030-03)	0.0054[d]	E	0.0024[o]	C	ND[n]	
Tertiary Crushing (controlled) (SCC 3-05-020-03)	0.0012[d]	E	0.00054[p]	C	0.00010[q]	E
Fines Crushing (SCC 3-05-020-05)	0.0390[e]	E	0.0150[e]	E	ND	
Fines Crushing (controlled) (SCC 3-05-020-05)	0.0030[f]	E	0.0012[f]	E	0.000070[q]	E
Screening (SCC 3-05-020-02, 03)	0.025[c]	E	0.0087[l]	C	ND	
Screening (controlled) (SCC 3-05-020-02, 03)	0.0022[d]	E	0.00074[m]	C	0.000050[q]	E
Fines Screening (SCC 3-05-020-21)	0.30[g]	E	0.072[g]	E	ND	
Fines Screening (controlled) (SCC 3-05-020-21)	0.0036[g]	E	0.0022[g]	E	ND	
Conveyor Transfer Point (SCC 3-05-020-06)	0.0030[h]	E	0.00110[h]	D	ND	
Conveyor Transfer Point (controlled) (SCC 3-05-020-06)	0.00014[i]	E	4.6×10^{-5}[i]	D	1.3×10^{-5}[q]	E
Wet Drilling - Unfragmented Stone (SCC 3-05-020-10)	ND		8.0×10^{-5}[j]	E	ND	
Truck Unloading -Fragmented Stone (SCC 3-05-020-31)	ND		1.6×10^{-5}[j]	E	ND	
Truck Loading - Conveyor, crushed stone (SCC 3-05-020-32)	ND		0.00010[k]	E	ND	

a. Emission factors represent uncontrolled emissions unless noted. Emission factors in lb/Ton of material of throughput. SCC = Source Classification Code. ND = No data.

b. Controlled sources (with wet suppression) are those that are part of the processing plant that employs current wet suppression technology similar to the study group. The moisture content of the study group without wet suppression systems operating (uncontrolled) ranged from 0.21 to 1.3 percent, and the same facilities operating wet suppression systems (controlled) ranged from 0.55 to 2.88 percent. Due to carry over of the small amount of moisture required, it has been shown that each source, with the exception of crushers, does not need to employ direct water sprays. Although the moisture content was the only variable measured, other process features may have as much influence on emissions from a given source. Visual observations from each source under normal operating conditions are probably the best indicator of which emission factor is most appropriate. Plants that employ substandard control measures as indicated by visual observations should use the uncontrolled factor with an appropriate control efficiency that best reflects the effectiveness of the controls employed.

c. References 1, 3, 7, and 8

d. References 3, 7, and 8

13.2.2 Unpaved Roads

13.2.2.1 General

When a vehicle travels an unpaved road, the force of the wheels on the road surface causes pulverization of surface material. Particles are lifted and dropped from the rolling wheels, and the road surface is exposed to strong air currents in turbulent shear with the surface. The turbulent wake behind the vehicle continues to act on the road surface after the vehicle has passed.

The particulate emission factors presented in the previous draft version of this section of AP-42, dated October 2001, implicitly included the emissions from vehicles in the form of exhaust, brake wear, and tire wear as well as resuspended road surface material[25]. EPA included these sources in the emission factor equation for unpaved public roads (equation 1b in this section) since the field testing data used to develop the equation included both the direct emissions from vehicles and emissions from resuspension of road dust.

This version of the unpaved public road emission factor equation only estimates particulate emissions from resuspended road surface material [23, 26]. The particulate emissions from vehicle exhaust, brake wear, and tire wear are now estimated separately using EPA's MOBILE6.2 [24]. This approach eliminates the possibility of double counting emissions. Double counting results when employing the previous version of the emission factor equation in this section and MOBILE6.2 to estimate particulate emissions from vehicle traffic on unpaved public roads. It also incorporates the decrease in exhaust emissions that has occurred since the unpaved public road emission factor equation was developed. The previous version of the unpaved public road emission factor equation includes estimates of emissions from exhaust, brake wear, and tire wear based on emission rates for vehicles in the 1980 calendar year fleet. The amount of PM released from vehicle exhaust has decreased since 1980 due to lower new vehicle emission standards and changes in fuel characteristics.

13.2.2.2 Emissions Calculation And Correction Parameters[1-6]

The quantity of dust emissions from a given segment of unpaved road varies linearly with the volume of traffic. Field investigations also have shown that emissions depend on source parameters that characterize the condition of a particular road and the associated vehicle traffic. Characterization of these source parameters allow for "correction" of emission estimates to specific road and traffic conditions present on public and industrial roadways.

Dust emissions from unpaved roads have been found to vary directly with the fraction of silt (particles smaller than 75 micrometers [μm] in diameter) in the road surface materials.[1] The silt fraction is determined by measuring the proportion of loose dry surface dust that passes a 200-mesh screen, using the ASTM-C-136 method. A summary of this method is contained in Appendix C of AP-42. Table 13.2.2-1 summarizes measured silt values for industrial unpaved roads. Table 13.2.2-2 summarizes measured silt values for public unpaved roads. It should be noted that the ranges of silt content vary over two orders of magnitude. Therefore, the use of data from this table can potentially introduce considerable error. Use of this data is strongly discouraged when it is feasible to obtain locally gathered data.

Since the silt content of a rural dirt road will vary with geographic location, it should be measured for use in projecting emissions. As a conservative approximation, the silt content of the parent soil in the area can be used. Tests, however, show that road silt content is normally lower than in the surrounding parent soil, because the fines are continually removed by the vehicle traffic, leaving a higher percentage of coarse particles.

Other variables are important in addition to the silt content of the road surface material. For example, at industrial sites, where haul trucks and other heavy equipment are common, emissions are highly correlated with vehicle weight. On the other hand, there is far less variability in the weights of cars and pickup trucks that commonly travel publicly accessible unpaved roads throughout the United States. For those roads, the moisture content of the road surface material may be more dominant in determining differences in emission levels between, for example a hot, desert environment and a cool, moist location.

The PM-10 and TSP emission factors presented below are the outcomes from stepwise linear regressions of field emission test results of vehicles traveling over unpaved surfaces. Due to a limited amount of information available for PM-2.5, the expression for that particle size range has been scaled against the result for PM-10. Consequently, the quality rating for the PM-2.5 factor is lower than that for the PM-10 expression.

Table 13.2.2-1. TYPICAL SILT CONTENT VALUES OF SURFACE MATERIAL ON INDUSTRIAL UNPAVED ROADS[a]

Industry	Road Use Or Surface Material	Plant Sites	No. Of Samples	Silt Content (%)	
				Range	Mean
Copper smelting	Plant road	1	3	16 - 19	17
Iron and steel production	Plant road	19	135	0.2 - 19	6.0
Sand and gravel processing	Plant road	1	3	4.1 - 6.0	4.8
	Material storage area	1	1	-	7.1
Stone quarrying and processing	Plant road	2	10	2.4 - 16	10
	Haul road to/from pit	4	20	5.0-15	8.3
Taconite mining and processing	Service road	1	8	2.4 - 7.1	4.3
	Haul road to/from pit	1	12	3.9 - 9.7	5.8
Western surface coal mining	Haul road to/from pit	3	21	2.8 - 18	8.4
	Plant road	2	2	4.9 - 5.3	5.1
	Scraper route	3	10	7.2 - 25	17
	Haul road (freshly graded)	2	5	18 - 29	24
Construction sites	Scraper routes	7	20	0.56-23	8.5
Lumber sawmills	Log yards	2	2	4.8-12	8.4
Municipal solid waste landfills	Disposal routes	4	20	2.2 - 21	6.4

[a]References 1,5-15.

The following empirical expressions may be used to estimate the quantity in pounds (lb) of size-specific particulate emissions from an unpaved road, per vehicle mile traveled (VMT):

For vehicles traveling on unpaved surfaces at industrial sites, emissions are estimated from the following equation:

$$E = k\,(s/12)^a (W/3)^b \tag{1a}$$

and, for vehicles traveling on publicly accessible roads, dominated by light duty vehicles, emissions may be estimated from the following:

$$E = \frac{k\,(s/12)^a (S/30)^d}{(M/0.5)^c} - C \tag{1b}$$

where k, a, b, c and d are empirical constants (Reference 6) given below and

E = size-specific emission factor (lb/VMT)
s = surface material silt content (%)
W = mean vehicle weight (tons)
M = surface material moisture content (%)
S = mean vehicle speed (mph)
C = emission factor for 1980's vehicle fleet exhaust, brake wear and tire wear.

The source characteristics s, W and M are referred to as correction parameters for adjusting the emission estimates to local conditions. The metric conversion from lb/VMT to grams (g) per vehicle kilometer traveled (VKT) is as follows:

1 lb/VMT = 281.9 g/VKT

The constants for Equations 1a and 1b based on the stated aerodynamic particle sizes are shown in Tables 13.2.2-2 and 13.2.2-4. The PM-2.5 particle size multipliers (k-factors) are taken from Reference 27.

Table 13.2.2-2. CONSTANTS FOR EQUATIONS 1a AND 1b

Constant	Industrial Roads (Equation 1a)			Public Roads (Equation 1b)		
	PM-2.5	PM-10	PM-30*	PM-2.5	PM-10	PM-30*
k (lb/VMT)	0.15	1.5	4.9	0.18	1.8	6.0
a	0.9	0.9	0.7	1	1	1
b	0.45	0.45	0.45	-	-	-
c	-	-	-	0.2	0.2	0.3
d	-	-	-	0.5	0.5	0.3
Quality Rating	B	B	B	B	B	B

*Assumed equivalent to total suspended particulate matter (TSP)
"-" = not used in the emission factor equation

Table 13.2.2-2 also contains the quality ratings for the various size-specific versions of Equation 1a and 1b. The equation retains the assigned quality rating, if applied within the ranges of source conditions, shown in Table 13.2.2-3, that were tested in developing the equation:

Table 13.2.2-3. RANGE OF SOURCE CONDITIONS USED IN DEVELOPING EQUATION 1a AND 1b

Emission Factor	Surface Silt Content, %	Mean Vehicle Weight		Mean Vehicle Speed		Mean No. of Wheels	Surface Moisture Content, %
		Mg	ton	km/hr	mph		
Industrial Roads (Equation 1a)	1.8-25.2	1.8-260	2-290	8-69	5-43	4-17[a]	0.03-13
Public Roads (Equation 1b)	1.8-35	1.4-2.7	1.5-3	16-88	10-55	4-4.8	0.03-13

[a] See discussion in text.

As noted earlier, the models presented as Equations 1a and 1b were developed from tests of traffic on unpaved surfaces. Unpaved roads have a hard, generally nonporous surface that usually dries quickly after a rainfall or watering, because of traffic-enhanced natural evaporation. (Factors influencing how fast a road dries are discussed in Section 13.2.2.3, below.) The quality ratings given above pertain to the mid-range of the measured source conditions for the equation. A higher mean vehicle weight and a higher than normal traffic rate may be justified when performing a worst-case analysis of emissions from unpaved roads.

The emission factors for the exhaust, brake wear and tire wear of a 1980's vehicle fleet (C) was obtained from EPA's MOBILE6.2 model [23]. The emission factor also varies with aerodynamic size range

as shown in Table 13.2.2-4

Table 13.2.2-4. EMISSION FACTOR FOR 1980'S VEHICLE FLEET EXHAUST, BRAKE WEAR AND TIRE WEAR

Particle Size Range[a]	*C*, Emission Factor for Exhaust, Brake Wear and Tire Wear[b] lb/VMT
$PM_{2.5}$	0.00036
PM_{10}	0.00047
PM_{30}[c]	0.00047

[a] Refers to airborne particulate matter (PM-x) with an aerodynamic diameter equal to or less than x micrometers.
[b] Units shown are pounds per vehicle mile traveled (lb/VMT).
[c] PM-30 is sometimes termed "suspendable particulate" (SP) and is often used as a surrogate for TSP.

It is important to note that the vehicle-related source conditions refer to the average weight, speed, and number of wheels for all vehicles traveling the road. For example, if 98 percent of traffic on the road are 2-ton cars and trucks while the remaining 2 percent consists of 20-ton trucks, then the mean weight is 2.4 tons. More specifically, Equations 1a and 1b are *not* intended to be used to calculate a separate emission factor for each vehicle class within a mix of traffic on a given unpaved road. That is, in the example, one should *not* determine one factor for the 2-ton vehicles and a second factor for the 20-ton trucks. Instead, only one emission factor should be calculated that represents the "fleet" average of 2.4 tons for all vehicles traveling the road.

Moreover, to retain the quality ratings when addressing a group of unpaved roads, it is necessary that reliable correction parameter values be determined for the road in question. The field and laboratory procedures for determining road surface silt and moisture contents are given in AP-42 Appendices C.1 and C.2. Vehicle-related parameters should be developed by recording visual observations of traffic. In some cases, vehicle parameters for industrial unpaved roads can be determined by reviewing maintenance records or other information sources at the facility.

In the event that site-specific values for correction parameters cannot be obtained, then default values may be used.In the absence of site-specific silt content information, an appropriate mean value from Table 13.2.2-1 may be used as a default value, but the quality rating of the equation is reduced by two letters. Because of significant differences found between different types of road surfaces and between different areas of the country, use of the default moisture content value of 0.5 percent in Equation 1b is discouraged. The quality rating should be downgraded two letters when the default moisture content value is used. (It is assumed that readers addressing industrial roads have access to the information needed to develop average vehicle information in Equation 1a for their facility.)

The effect of routine watering to control emissions from unpaved roads is discussed below in Section 13.2.2.3, "Controls". However, all roads are subject to some natural mitigation because of rainfall and other precipitation. The Equation 1a and 1b emission factors can be extrapolated to annual

average uncontrolled conditions (but including natural mitigation) under the simplifying assumption that annual average emissions are inversely proportional to the number of days with measurable (more than 0.254 mm [0.01 inch]) precipitation:

$$E_{ext} = E\ [(365 - P)/365] \qquad (2)$$

where:

E_{ext} = annual size-specific emission factor extrapolated for natural mitigation, lb/VMT

E = emission factor from Equation 1a or 1b

P = number of days in a year with at least 0.254 mm (0.01 in) of precipitation (see below)

Figure 13.2.2-1 gives the geographical distribution for the mean annual number of "wet" days for the United States.

Equation 2 provides an estimate that accounts for precipitation on an annual average basis for the purpose of inventorying emissions. It should be noted that Equation 2 does not account for differences in the temporal distributions of the rain events, the quantity of rain during any event, or the potential for the rain to evaporate from the road surface. In the event that a finer temporal and spatial resolution is desired for inventories of public unpaved roads, estimates can be based on a more complex set of assumptions. These assumptions include:

1. The moisture content of the road surface material is increased in proportion to the quantity of water added;
2. The moisture content of the road surface material is reduced in proportion to the Class A pan evaporation rate;
3. The moisture content of the road surface material is reduced in proportion to the traffic volume; and
4. The moisture content of the road surface material varies between the extremes observed in the area. The CHIEF Web site (http://www.epa.gov/ttn/chief/ap42/ch13/related/c13s02-2.html) has a file which contains a spreadsheet program for calculating emission factors which are temporally and spatially resolved. Information required for use of the spreadsheet program includes monthly Class A pan evaporation values, hourly meteorological data for precipitation, humidity and snow cover, vehicle traffic information, and road surface material information.

It is emphasized that <u>the simple assumption underlying Equation 2 and the more complex set of assumptions underlying the use of the procedure which produces a finer temporal and spatial resolution</u> have not been verified in any rigorous manner. For this reason, the quality ratings for either approach should be downgraded one letter from the rating that would be applied to Equation 1.

13.2.2.3 Controls[18-22]

A wide variety of options exist to control emissions from unpaved roads. Options fall into the following three groupings:

1. <u>Vehicle restrictions</u> that limit the speed, weight or number of vehicles on the road;

2. Surface improvement, by measures such as (a) paving or (b) adding gravel or slag to a dirt road; and

3. Surface treatment, such as watering or treatment with chemical dust suppressants.

Available control options span broad ranges in terms of cost, efficiency, and applicability. For example, traffic controls provide moderate emission reductions (often at little cost) but are difficult to enforce. Although paving is highly effective, its high initial cost is often prohibitive. Furthermore, paving is not feasible for industrial roads subject to very heavy vehicles and/or spillage of material in transport. Watering and chemical suppressants, on the other hand, are potentially applicable to most industrial roads at moderate to low costs. However, these require frequent reapplication to maintain an acceptable level of control. Chemical suppressants are generally more cost-effective than water but not in cases of temporary roads (which are common at mines, landfills, and construction sites). In summary, then, one needs to consider not only the type and volume of traffic on the road but also how long the road will be in service when developing control plans.

Vehicle restrictions. These measures seek to limit the amount and type of traffic present on the road or to lower the mean vehicle speed. For example, many industrial plants have restricted employees from driving on plant property and have instead instituted bussing programs. This eliminates emissions due to employees traveling to/from their worksites. Although the heavier average vehicle weight of the busses increases the base emission factor, the decrease in vehicle-miles-traveled results in a lower overall emission rate.

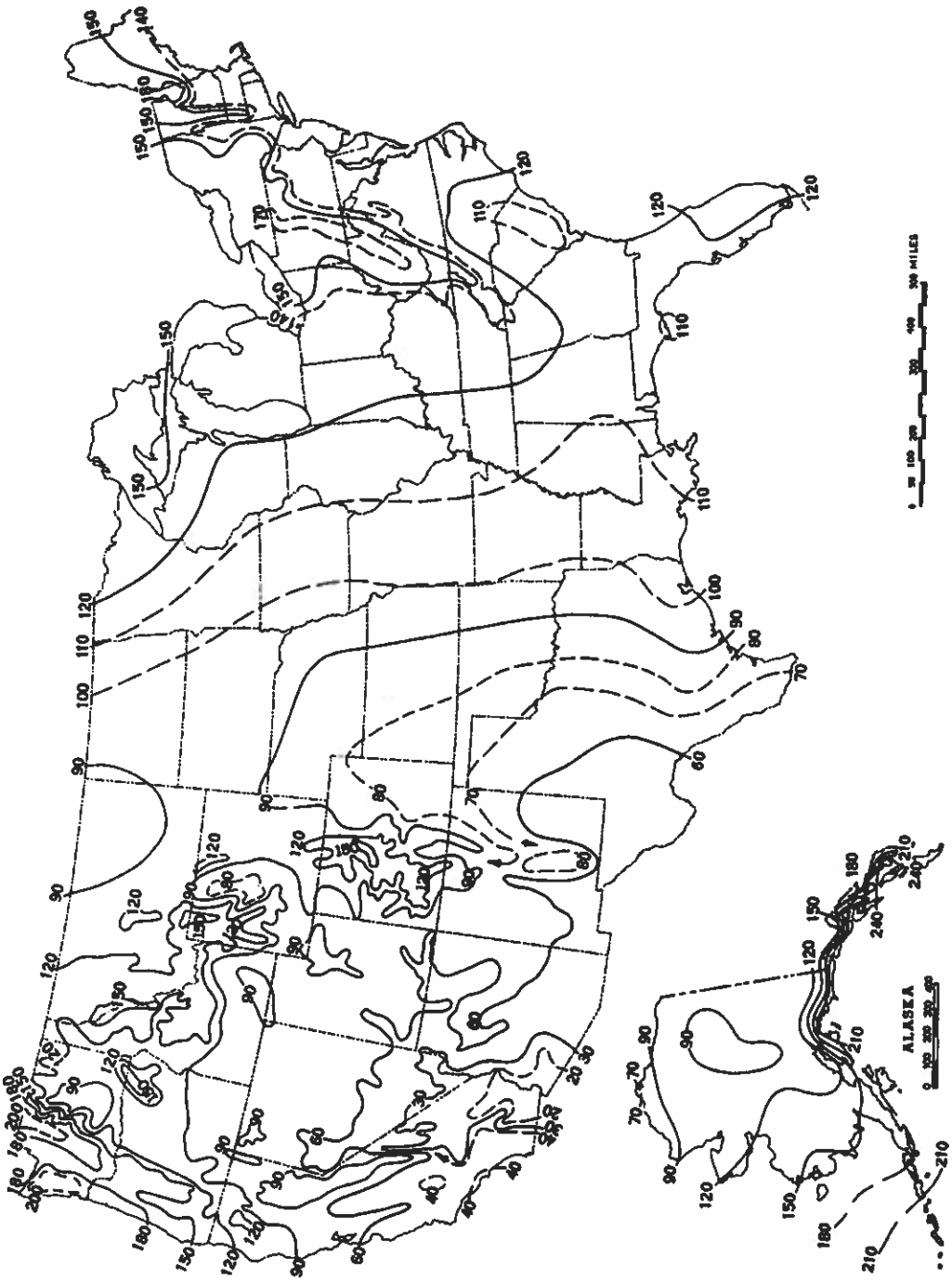

Figure 13.2.2-1. Mean number of days with 0.01 inch or more of precipitation in United States.

New Mexico
ENVIRONMENT DEPARTMENT

505 Camino de los Marquez, Suite 1
Santa Fe, NM 87505
Phone (505) 476-4300
Fax (505) 476-4375
www.env.nm.gov

SUSANA MARTINEZ
GOVERNOR

JOHN A. SANCHEZ
LIEUTENANT GOVERNOR

BUTCH TONGATE
CABINET SECRETARY-
DESIGATE

JC BORREGO
DEPUTY SECRETARY

DEPARTMENT ACCEPTED VALUES FOR:
AGGREGATE HANDLING, STORAGE PILE, and HAUL ROAD EMISSIONS

TO: Applicants and Air Quality Bureau Permitting Staff

SUBJECT: Department accepted default values for percent silt, wind speed, moisture content, and control efficiencies for haul road control measures

This guidance document provides the Department accepted default values for correction parameters in the emission calculation equations for aggregate handling and storage piles emissions in construction permit applications and notices of intent submitted under 20.2.72 and 20.2.73 NMAC; and the Department accepted control efficiencies for haul road control measures for applications submitted under 20.2.72 NMAC.

Aggregate Handling and Storage Pile Emission Calculations

Applicants should calculate the particulate matter emissions from aggregate handling and storage piles using the EPA's AP-42 Chapter 13.2.4.
http://www3.epa.gov/ttn/chief/ap42/ch13/final/c13s0204.pdf

Equation 1 from Chapter 13.2.4 requires users to input values for two correction parameters, U and M, where U = mean wind speed and M = material moisture content. Below are the accepted values for U and M:

Default Values for Chapter 13.2.4, Equation 1:

Parameter	Default Value
U = Mean wind speed (miles per hour)	11 mph
M = Material moisture content (% water)	2%

Applicants must receive preapproval from the Department if they wish to assume a higher moisture content and/or a lower wind speed in these calculations. Higher moisture contents may require site specific testing either as a permit condition or submitted with the application. Applicants may assume higher wind speeds and lower percent moisture content in their calculations without prior approval from the Department.

Haul Road Emissions and Control Measure Efficiencies

Applicants should calculate the particulate matter emissions from unpaved haul roads using the EPA's AP-42 Chapter 13.2.2. http://www3.epa.gov/ttn/chief/ap42/ch13/final/c13s0202.pdf

Equation 1(a) from Chapter 13.2.2 requires users to input values for two correction parameters, s and W, where s = surface material silt content (%) and W = mean vehicle weight (tons). The applicant should calculate the mean vehicle weight in accordance with the chapter's instructions. Below is the accepted value for the parameter s:

Default Values for Chapter 13.2.2, Equation 1(a):

Parameter	Default Value
s = surface material silt content (%)	4.8%

Applicants may use a higher silt content without prior approval from the Department. Use of a lower silt content requires prior approval from the Department and may require site specific testing in support of the request.

Equation 2 from Chapter 13.2.2 allows users to take credit for the number of days that receive precipitation in excess of 0.01 inches, in the annual emissions calculation, where P = number of days in a year with at least 0.01 inches of precipitation.

Default Values for Chapter 13.2.2, Equation 2:

Parameter	Default Value
P = number of days in a year with at least 0.01 inches of precipitation	70 days

Applications submitted under Part 72 may request to apply control measures to reduce the particulate matter emissions from facility haul roads. Applications submitted under Part 73 may not consider any emission reduction from control measures in the potential emission rate calculation, as registrations issued under Part 73 are not federally enforceable under the Clean Air Act or the New Mexico Air Quality Control Act. In order for those control measures to be federally enforceable, the controls must be a requirement in an air quality permit.

Below are the Department accepted control efficiencies for various haul road control measures:

Haul Road Control Measures and Control Efficiency:

Control Measure	Control Efficiency
None	0%
Base course or watering	60%
Base course and watering	80%
Base course and surfactant	90%
Paved and Swept	95%

City of Albuquerque

Environmental Health Department
Air Quality Program

Permit Application Checklist

Any person seeking a permit under 20.11.41 NMAC, Authority-to-Construct Permits, shall do so by filing a written application with the Department. Prior to ruling a submitted application complete each application submitted shall contain the required items listed below. **This checklist must be returned with the application.**

Applications that are ruled incomplete because of missing information will delay any determination or the issuance of the permit. The Department reserves the right to request additional relevant information prior to ruling the application complete in accordance with 20.11.41 NMAC.

All applicants shall:

1. ☑ Fill out and submit the *Pre-permit Application Meeting Request* form
   a. ☐ Attach a copy to this application
   N/A – A Pre-Permit Application Meeting is not required as Trinity Consultants is familiar with the CABQ permitting process.

2. ☑ Attend the pre-permit application meeting
   a. ☐ Attach a copy of the completed *Pre-permit Application Meeting Checklist* to this application
   N/A – A Pre-Permit Application Meeting is not required as Trinity Consultants is familiar with the CABQ permitting process.

3. ☑ Provide public notice to the appropriate parties
   a. ☑ Attach a copy of the completed *Notice of Intent to Construct* form to this form
      i. Neighborhood Association(s): See attached memo of Neighborhood Associations provided by the City of Albuquerque on 04/12/2019.

      ii. Coalition(s): See attached memo of Neighborhood Coalitions provided by the City of Albuquerque on 04/12/2019.

   b. ☑ Attach a copy of the completed *Public Sign Notice Guideline* form

4. Fill out and submit the *Permit Application*. All applications shall:

   A. ☑ be made on a form provided by the Department. Additional text, tables, calculations or clarifying information may also be attached to the form.

   B. ☑ at the time of application, include documentary proof that all applicable permit application review fees have been paid as required by 20 NMAC 11.02. Please refer to the attached permit application worksheet.

C. ☑ contain the applicant's name, address, and the names and addresses of all other owners or operators of the emission sources.

D. ☑ contain the name, address, and phone number of a person to contact regarding questions about the facility.

E. ☑ indicate the date the application was completed and submitted

F. ☑ contain the company name, which identifies this particular site.

G. ☑ contain a written description of the facility and/or modification including all operations affecting air emissions.

H. ☑ contain the maximum and standard operating schedules for the source after completion of construction or modification in terms of hours per day, days per week, and weeks per year.

I. ☑ provide sufficient information to describe the quantities and nature of any regulated air contaminant (including any amount of a hazardous air pollutant) that the source will emit during:

- Normal operation
- Maximum operation
- Abnormal emissions from malfunction, start-up and shutdown

J. ☑ include anticipated operational needs to allow for reasonable operational scenarios to avoid delays from needing additional permitting in the future.

K. ☑ contain a map, such as a 7.5-minute USGS topographic quadrangle, showing the exact location of the source; and include physical address of the proposed source.

L. ☑ contain an aerial photograph showing the proposed location of each process equipment unit involved in the proposed construction, modification, relocation, or technical revision of the source except for federal agencies or departments involved in national defense or national security as confirmed and agreed to by the department in writing.

M. ☑ contain the UTM zone and UTM coordinates.

N. ☑ include the four digit Standard Industrialized Code (SIC) and the North American Industrial Classification System (NAICS).

O. ☑ contain the types and **potential emission rate** amounts of any regulated air contaminants the new source or modification will emit. Complete appropriate sections of the application; attachments can be used to supplement the application, but not replace it.

P. ☑ contain the types and **controlled** amounts of any regulated air contaminants the new source or modification will emit. Complete appropriate sections of the application; attachments can be used to supplement the application, but not replace it.

Q. ☑ contain the basis or source for each emission rate (include the manufacturer's specification sheets, AP-42 Section sheets, test data, or other data when used as the source).

R. ☑ contain all calculations used to estimate **potential emission rate** and **controlled** emissions.

S. ☑ contain the basis for the estimated control efficiencies and sufficient engineering data for verification of the control equipment operation, including if necessary, design drawings, test reports, and factors which affect the normal operation (e.g. limits to normal operation).

T. ☑ contain fuel data for each existing and/or proposed piece of fuel burning equipment.

U. ☑ contain the anticipated maximum production capacity of the entire facility and the requested production capacity after construction and/or modification.

V. ☑ contain the stack and exhaust gas parameters for all existing and proposed emission stacks.

W. ☑ provide an ambient impact analysis using a atmospheric dispersion model approved by the US Environmental Protection Agency (EPA), and the Department to demonstrate compliance with the ambient air quality standards for the City of Albuquerque and Bernalillo County (See 20.11.01 NMAC). If you are modifying an existing source, the modeling must include the emissions of the entire source to demonstrate the impact the new or modified source(s) will have on existing plant emissions.

X. ☑ contain a preliminary operational plan defining the measures to be taken to mitigate source emissions during malfunction, startup, or shutdown.

SSM emissions are not significantly different from the steady state emissions for the emissions units at North Valley Stockpile Site. Therefore, the emissions proposed in the application should also be sufficient for SSM. In order to mitigate source emissions, ABCWUA utilizes a daily tracking sheet to manage operations within permitted limits. According to manufacturer specifications, ABCWUA upkeeps the engine with the following maintenance and documentation:

- *The oil and oil filter is changed every 1,000 hours of operation or annually, whichever comes first.*
- *The air cleaner is inspected every 1,000 hours of operation or annually, whichever comes first.*
- *All hoses and belts are inspected every 500 hours of operation or annually, whichever comes first and replace as necessary.*

Y. ☑ contain a process flow sheet, including a material balance, of all components of the facility that would be involved in routine operations. Indicate all emission points, including fugitive points.

Z. ☑ contain a full description, including all calculations and the basis for all control efficiencies presented, of the equipment to be used for air pollution control. This shall include a process flow sheet or, if the Department so requires, layout and assembly drawings, design plans, test reports and factors which affect the normal equipment operation, including control and/or process equipment operating limitations.

AA. ☑ contain description of the equipment or methods proposed by the applicant to be used for emission measurement.

BB. ☑ be signed under oath or affirmation by a corporate officer, authorized to bind the company into legal agreements, certifying to the best of his or her knowledge the truth of all information submitted.

ABCWUA - North Valley Stockpile Site

Aerial Photograph

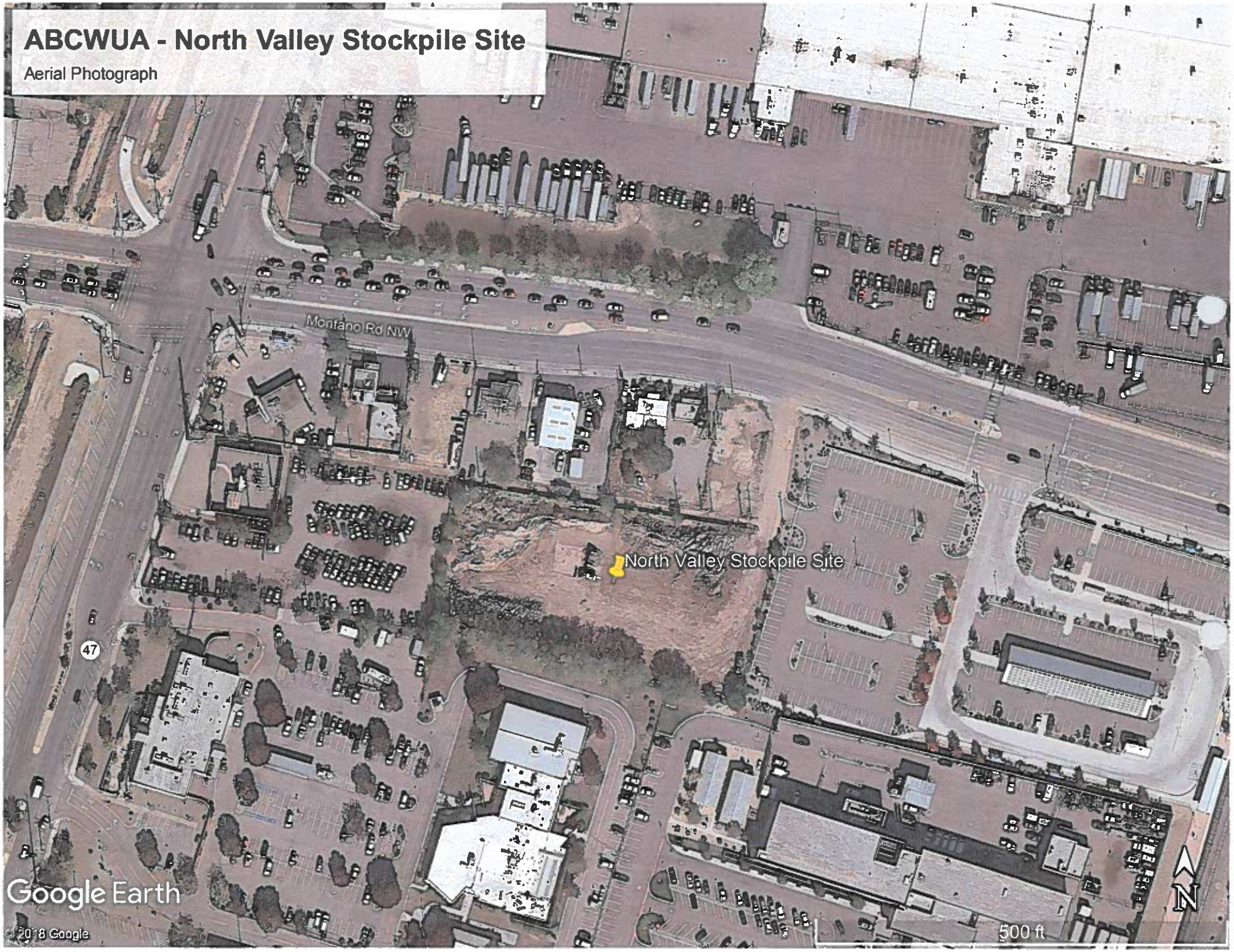

PERMIT MODIFICATION APPLICATION

Albuquerque Bernalillo County Water Utility Authority
North Valley Stockpile Site

Albuquerque Bernalillo County
Water Utility Authority

Prepared By:

Joel Berman – Chief Engineer of Distribution, Field Operations Division
Albuquerque Bernalillo County Water Utility Authority
5408 2nd Street NW
Albuquerque, NM 87103
(505) 289-3524

Andrew Glen, PhD – Managing Consultant

TRINITY CONSULTANTS
9400 Holly Ave NE
Building 3, Suite 300
Albuquerque, NM 87122
(505) 266-6611

May 14, 2019

Project 193201.0068

Trinity Consultants

Environmental solutions delivered uncommonly well

P Q